Chapter 2

Process Layout

2.1 Flowsheet

A plant design is made up of words, numbers, and pictures. An engineer thinks naturally in terms of the sketches and drawings which are his pictures. Thus, to solve a material balance problem, he will start with a block to represent the equipment and then will show entering and leaving streams with their amounts and properties. Or ask him to describe a process and he will begin to sketch the equipment, show how iris interconnected, and what the flows and operating conditions are. Such sketches develop into flow sheets, which are more elaborate diagrammatic representations of the equipment, the sequence of operations, and the expected performance of a proposed plant or the actual performance of an already operating one. For clarity and to meet the needs of the various persons engaged in design, cost estimating, purchasing, fabrication, operation, maintenance, and management, several different kinds of flow sheets are necessary. Four of the main kinds will be described and illustrated.

2.1.1 Block flowsheets

A block diagram is the simplest form of flow diagram. Each block can represent a single piece of equipment or a complete stage in the process. Block diagrams are useful for showing simple processes. For complex processes, their uses is limited to showing the over all process, broken down into principal stages.

At an early stage or to provide an overview of a complex process or plant, a drawing is made with rectangular blocks to represent individual processes or groups of operations, together with quantities and other pertinent properties of key streams between the blocks and into and from the process as a whole. Such block flowsheets are made at the beginning of a process design for orientation purposes or later as a summary of the material balanceof the process. Figure 2.1 is an example of this kind of flowsheets.

2.1.2 Process flowsheets

Process flowsheets (Figure 2.2) embody the material and energy balances between and the sizing of the major equipment of the plant. They include all vessels such as reactors, separators, and drums; special processing equipment, heat exchangers, pumps, and so on. Numerical data include flow quantities, compositions, pressures, temperatures, and so on.

2.1.3 Mechanical (P&l) flowsheets

Mechanical flowsheets (Figure 2.3) also are called piping and instrument (P&I)diagrams to emphasize two of their major characteristics. The (P&I) diagrams shows the arrangement of the process equipment, piping, pump, instruments, valves, and other fittings. It should include the following:

1 All process equipment identified by an equipment number. The equipment should be drawn roughly in proportion, and the location of nozzles shown.

2 All pipes identified by a line number

3 All valves:control and block valves, with identification number

4 Ancillarry fittings that are a part of the piping system.

5 Pumps are identified by a suitable code number

6 All control loops and instruments, with an identification number.

The equipment is shown in greater detail than that of the process flowsheets (PFS).

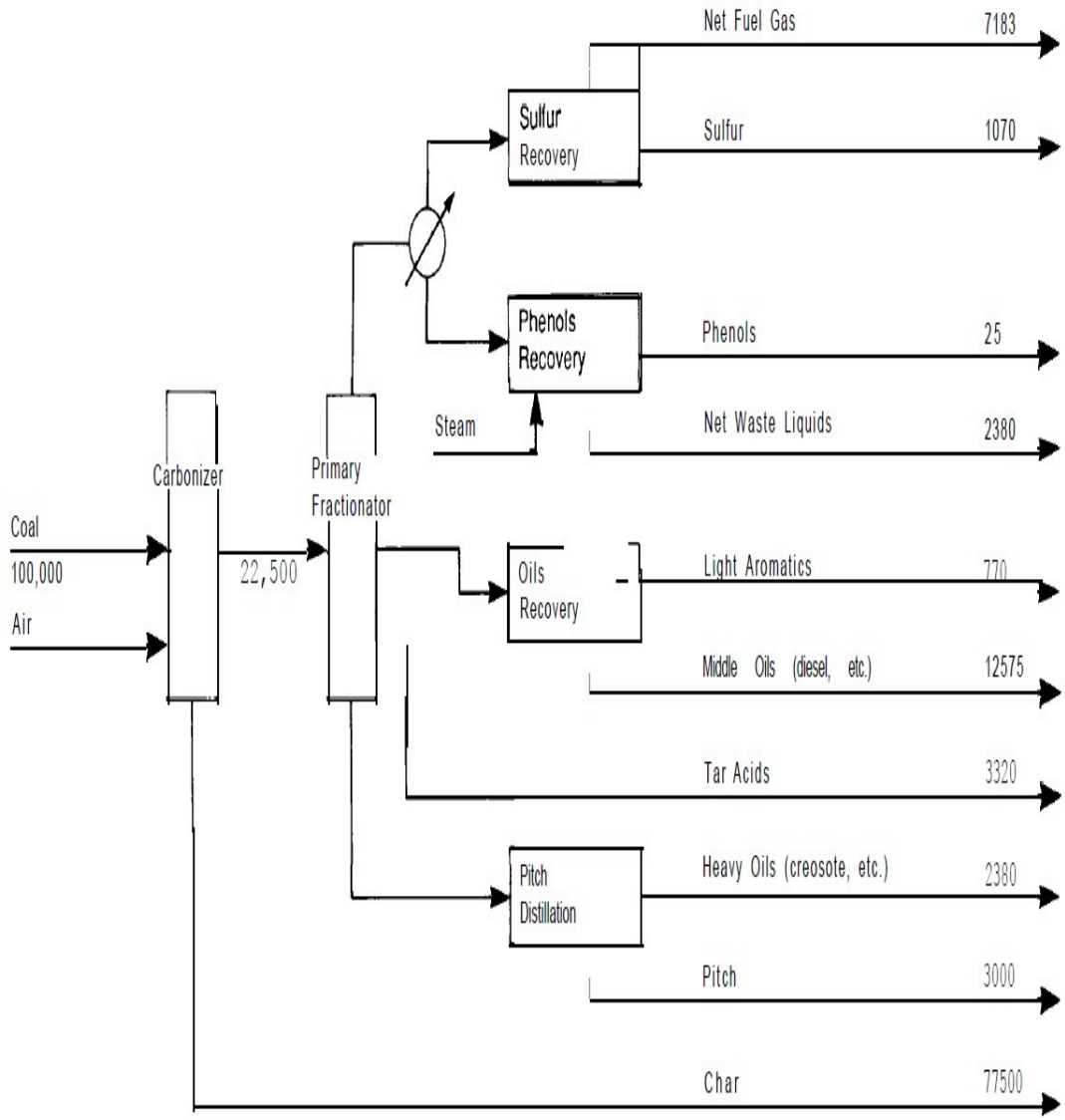

Figure 2.1: Coal carbonization block flowsheets quantities in lb/hr

2.1.4 Utility flowsheets

These are P&I diagrams for individual utilities such as steam, steam condensate, cooling water, heat transfer media in general compressed air, fuel, refrigerants, and

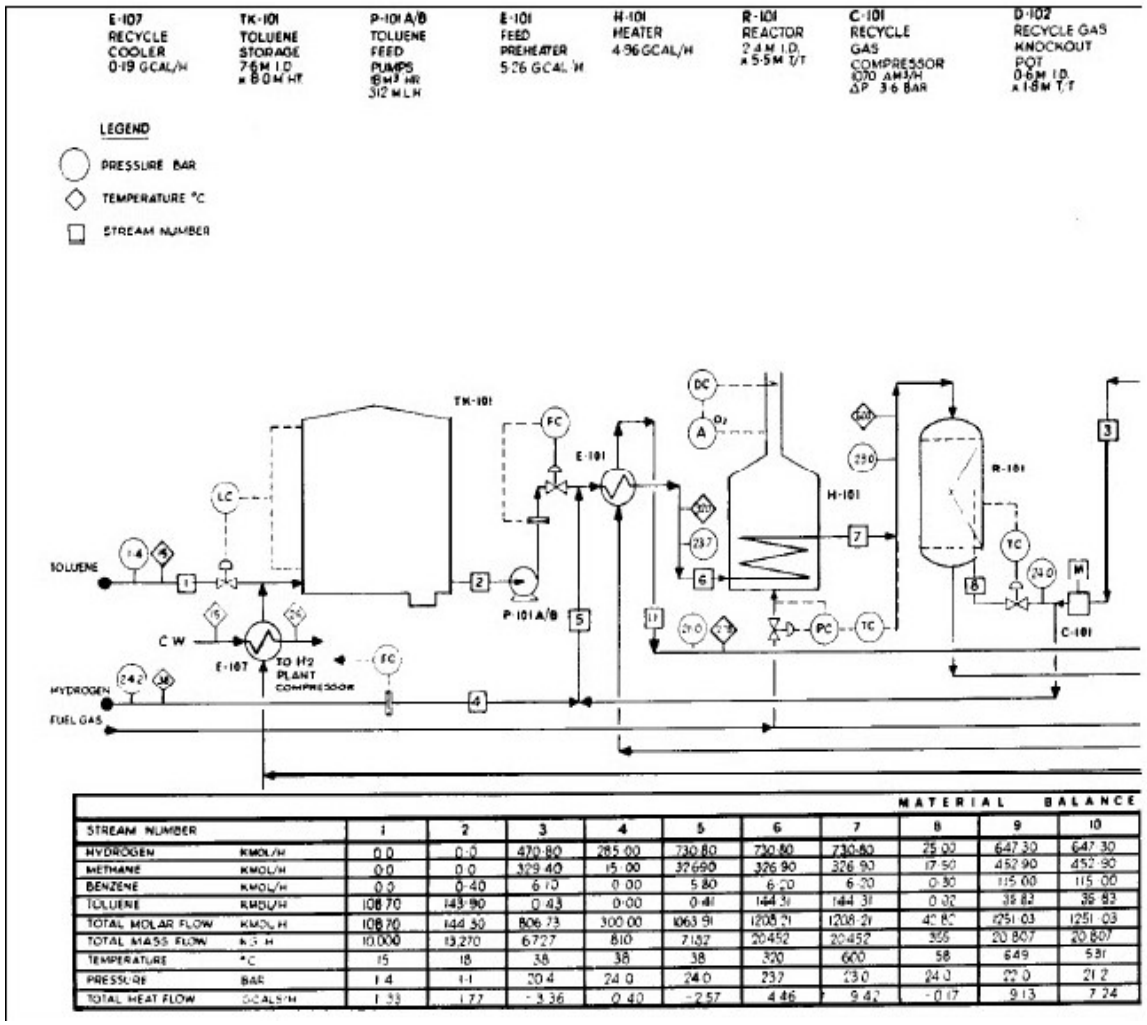

MATERIAL BALANCE

STREAM NUMBER		1	2	3	4	5	6	7	8	9	10
HYDROGEN	KMOL/H	0.0	0.0	470.80	285.00	730.80	730.80	730.80	25.00	647.30	647.30
METHANE	KMOL/H	0.0	0.0	329.40	15.00	326.90	326.90	326.90	17.50	452.90	452.90
BENZENE	KMOL/H	0.0	0.40	6.70	0.00	5.80	6.20	6.20	0.30	115.00	115.00
TOLUENE	KMOL/H	108.70	143.90	0.43	0.00	0.41	144.31	144.31	0.02	39.83	39.83
TOTAL MOLAR FLOW	KMOL/H	108.70	144.30	806.73	300.00	1063.91	1208.21	1208.21	42.80	1251.03	1251.03
TOTAL MASS FLOW	KG/H	10,000	13,270	6727	810	7,132	20,452	20,452	355	20,807	20,807
TEMPERATURE	°C	15	18	38	38	38	320	600	58	649	531
PRESSURE	BAR	1.4	1.1	20.4	24.0	24.0	23.7	23.0	24.0	22.0	21.2
TOTAL HEAT FLOW	GCALS/H	1.33	1.77	-3.36	0.40	-2.57	4.46	9.42	-0.17	9.13	7.24

Figure 2.2: Process flowsheet of manufacture of benzen by dealkylation of toluene

inert blanketing gases, and how they are piped up to the process equipment. Connections for utility streams are shown on the mechanical flowsheet, and their conditions and flow quantities usually appear on the process flowsheet.

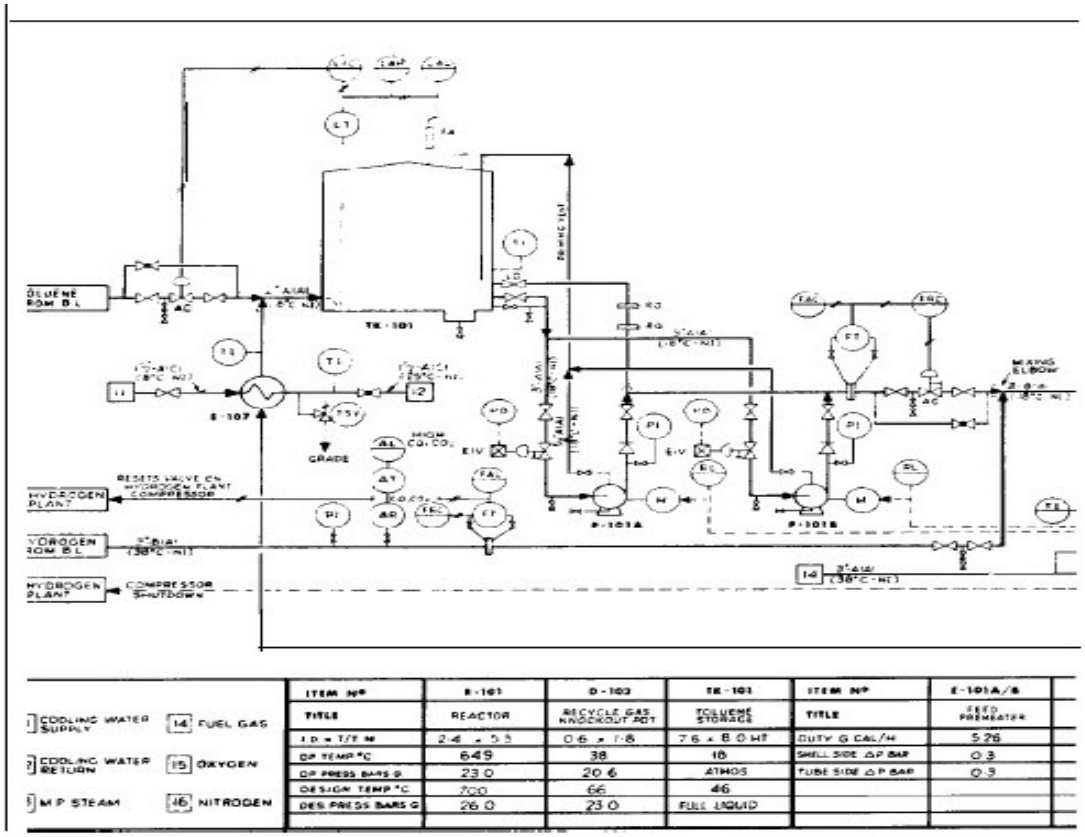

Figure 2.3: Engineering (P&I) sheet of the reaction section of plant for dealkylation of benzen

2.2 Drawing flowsheets

In order to explain and understand the processes, flowsheets are utilized. Equipment symbols are a compromise between a schematic representation of the equipment and simplicity and ease of drawing. A selection for the more common kinds of equipment appears in Figure 2.4, Figure 2.5, and Figure 2.6. Less common equipment or any with especially intricate configuration often is represented simply by a circle or rectangle. These sympols carries a name and a letter-number for identification.