Computer Sciences

University of Anbar
College of Pharmacy

2020 - 2021

Jamal Ali Hammad

List of Contents

1. Components of Computer system

Every computer is composed of two basic components: **Hardware** and **Software**.

A. **Computer hardware** is the umbrella term used to describe the physical collection of elements that complete a whole computer system. Hardware encompasses the external tools that allow users to operate a computer, such as the keyboard, mouse and the monitor, and internal components like the motherboard, graphics card, and hard disc.

B. **Computer Software** is the term used to define the sets of code, data, and instructions stored on the computer's hard drive that operate the machine from behind the scenes. In other words, software allows a computer to actually perform tasks, without software, computer hardware would be entirely useless.

1.1 Computer Hardware

The term **'Computer hardware'** or **'Computer parts'** is used to describe the physical and tangible components of a computer, i.e. the components that can be seen and touched.

Examples of Hardware are the following:

- **Input devices** − keyboard, mouse, etc.
- **Output devices** − printer, monitor, etc.
- **Internal components** − CPU, motherboard, Memory, etc.
- **Secondary storage devices** − Hard disk, CD, DVD, etc.

Figure 1: Computer hardware

1.1.1 Input Devices (Input Unit)

Input unit is used for transfers' raw Data and control signals into the information processing system by the user before processing and computation. All the input unit devices provide the instructions and data are transformed into binary codes that is the primary memory acceptable format.

Example of Input unit devices: keyboard, mouse, scanner, joystick, Magnetic tape etc.

Input Devices	Characteristics	Image
Keyboard	The keyboard was first peripheral device to be used with computers. It helps to input text and numbers into computer. It consists of 104 keys and 12 functional keys.	
Mouse	A mouse is an input device which is also called as pointing device because it helps to point data on screen. It also helps to select, highlight content and drag-drop controls.	
Trackballs	A trackball is also a pointing device which will work like a mouse. It is mainly used for gaming and entertainment purpose.	
Digital Pens	A digital pen is another input device which is mostly used with tablets, PDAs, etc. A digital pen is also called as a Stylus which helps to write or draw data over pad.	
Scanners	Scanners transform printed material and photographs into a digital representation. After scanning of printed material, page is represented in memory as an array of pixels.	
Barcode Readers	Barcode reader helps to read information which is printed as bars in back of goods or items.	
Voice Recognition System	Voice recognition system interprets or receives dictation or spoken commands to authorize user.	
Touch screen	A touch screen is an input device which uses sensors to sense touch of users to get input data.	

1.1.2 Output Devices

Output devices help to display output to user. Some of output devices are:

Output Devices	Characteristics	Image
Monitor	A monitor is most common type of output device. It is also called as "Visual Display Unit". The inputs given by keyboard or any other input devices will get displayed on monitor.	
Printers	Printers are most common type of output devices which are used to take a hard copy of any digital document. The two types of printers are impact and non-impact printers. Non-impact printers such as laser and inkjet printers are less noisy, more reliable and faster and also offer high quality compared to impact printers.	
Sound Systems	Sound systems are output devices which are used to get multimedia content such as voice, music, etc., as output. Some of examples of sound systems are speakers, headphones, and microphones.	

University of Anbar
College of Pharmacy
2020 - 2021

Jamal Ali Hammad

1.1.3 Internal Components

A. Central Processing Unit

The Central Processing Unit (CPU) is called "the brain of computer" as it controls operation of all parts of computer. CPU consists of two components: Arithmetic Logic Unit (ALU), and Control Unit (CU).

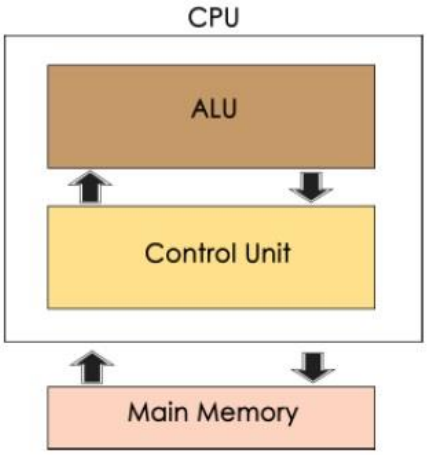

Figure 2: Central Processing Unit

a. Arithmetic Logic Unit (ALU)

An arithmetic logic unit (ALU) is a digital circuit used to perform arithmetic and logic operations. It represents the fundamental building block of the central processing unit (CPU) of a computer. Modern CPUs contain very powerful and complex ALUs. In addition to ALUs, modern CPUs contain a control unit (CU). Most of the operations of a CPU are performed by one or more ALUs, which load data from input registers.

b. Control Unit

A control unit works by receiving input information that it converts into control signals, which are then sent to the central processor. The computer's processor then tells the attached hardware what operations to carry out. The functions that a control unit performs are dependent on the type of CPU, due to the variance of architecture between different manufacturers.

The following diagram illustrates how instructions from a program are processed.

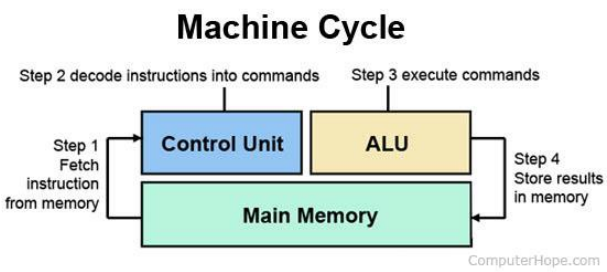

Figure 3: control unit work

Functions of Control Unit

Control unit performs following functions −

- It controls all activities of computer
- Supervises flow of data within CPU
- Directs flow of data within CPU
- Transfers data to Arithmetic and Logic Unit
- Transfers results to memory
- Fetches results from memory to output devices

c. Memory Unit

This is unit in which data and instructions given to computer as well as results given by computer are stored. Unit of memory is "Byte".

Computer memory is measured in terms of how many bits it can store. Here is a chart for memory capacity conversion.

1 byte (B) = 8 bits
1 Kilobytes (KB) = 1024 bytes
1 Megabyte (MB) = 1024 KB
1 Gigabyte (GB) = 1024 MB
1 Terabyte (TB) = 1024 GB
1 Exabyte (EB) = 1024 TB
1 Zettabyte = 1024 EB
1 Yottabyte (YB) = 1024 ZB

B. Motherboard

The motherboard serves as a single platform to connect all of the parts of a computer together. It connects the CPU, memory, hard drives, optical drives, video card, sound card, and other ports and expansion cards directly or via cables. It can be considered as the backbone of a computer.

Figure 4: Motherboard

The motherboard is mounted inside the case and is securely attached via small screws through pre-drilled holes. Motherboard contains ports to connect all of the internal components. It provides a single socket for CPU, whereas for memory, normally one or more slots are available. Motherboards provide ports to attach the floppy drive, hard drive, and optical drives via ribbon cables. Motherboard carries fans and a special port designed for power supply.

There is a peripheral card slot in front of the motherboard using which video cards, sound cards, and other expansion cards can be connected to the motherboard.

On the left side, motherboards carry a number of ports to connect the monitor, printer, mouse, keyboard, speaker, and network cables. Motherboards also provide USB ports, which allow compatible devices to be connected in plug-in/plug-out fashion. For example, pen drive, digital cameras, etc.

C. Computer Memory

Computer memory refers to storage area where data is stored. It is of three types: -

- Primary Memory
- Secondary Memory
- Cash Memory

a. Primary Memory

Primary memory is the main memory of computer present in motherboard. Primary memory is of two types as shown in the image below.

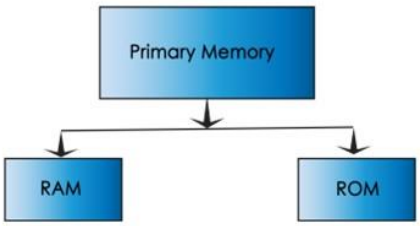

Figure 5: Computer Memory

i. Random Access Memory

Alternatively referred to as main memory, primary memory, or system memory, RAM (random-access memory) is a hardware device that allows information to be stored and retrieved on a computer. Because data is accessed randomly instead of sequentially like it is on a CD or hard drive, access times are much faster. However, unlike ROM, RAM is a volatile memory and requires power to keep the data accessible. If the computer is turned off, all data contained in RAM is lost.

Figure 6: RAM

Functions of RAM are as follows:

- It stores data till it gets processed.
- It stores instructions for data processing.
- It acts as a working space where data processing takes place and intermediate results are stored.
- It stores processed data/results before it is sent to output devices.

ii. Read Only Memory

ROM is referred as permanent memory, in which information stored is available even if computer is turned off. Instructions stored in this memory can only be read and cannot be modified. Mostly ROM has a start-up instruction which is executed every time when computer is switched on. Types of ROM are PROM (Programmable Read Only Memory), EPROM (Erasable PROM), EEPROM (Electrically Erasable PROM).

The below table jots down the major differences between RAM and ROM: -

Figure 7: ROM

Sr.No	RAM	ROM
1	It is volatile memory.	It is non-volatile memory.
2	The contents are temporary; data is lost when electricity supply is lost.	The contents are permanent; data is not lost even when power is switched off.
3	Available in small storage capacity.	Available in high storage capacity.
4	Processing speed is high.	Processing speed is low.
5	User-defined programs can be stored.	Generally, operating system supporting programs can be stored.
6	Cost is very high.	Cost effective.
7	It is of two types, SRAM and DRAM.	It comes in different types such as PROM, EPROM, EEPROM and flash memory.

b. Secondary Memory

Secondary memory refers to storage devices, such as hard drives and solid-state drives. It may also refer to removable storage media, such as USB flash drives, CDs, and DVDs.

Unlike primary memory, secondary memory is not accessed directly by the CPU. Instead, data accessed from secondary memory is first loaded into RAM and is then sent to the processor. The RAM plays an important intermediate role, since it provides much faster data access speeds than secondary memory. By loading software programs and files into primary memory, computers can process data much more quickly.

Figure 8: Secondary Memory

While secondary memory is much slower than primary memory, it typically offers far greater storage capacity. For example, a computer may have a one terabyte hard drive, but only 16 gigabytes of RAM. That means the computer has roughly 64 times more secondary memory than primary memory. Additionally, secondary memory is non-volatile, meaning it retains its data with or without electrical power. RAM, on the other hand, is erased when a computer is shut down or restarted. Therefore, secondary memory is used to store "permanent data," such as the operating system, applications, and user files.

c. Cache memory

Cache memory, also called Cache, a supplementary memory system that temporarily stores frequently used instructions and data for quicker processing by the central processor of a computer. The cache augments, and is an extension of, a computer's main memory. Both main memory and cache are internal, random-access memories (RAMs) that use semiconductor-based transistor circuits. Cache holds a copy of only the most frequently used information or program codes stored in the main memory; the smaller capacity of the cache reduces the time required to locate data within it and provide it to the computer for processing.

1.1.4 Secondary storage devices

Secondary storage is where data software can be stored on permanent basis. The data on secondary memory stays there until it is deleted or overwritten by the user. There are three types of secondary storage devices. They are:

1. Magnetic.
2. Optical.
3. Solid state storage.

Figure 9: Secondary storage devices

The most commonly used magnetic storage device is hard drive. There are primarily three types of optical storage devices, CD (compact disk), DVD (digital video disk) and BD (blue ray disk). CDs can hold about 700 MB data DVD can hold about 4.7 GB data and Blue ray disk can have 5 times the storage of DVD.

Solid state storage devices are becoming more and more popular and they are replacing disk drives (both magnetic and optic). They require less energy and quieter. Some examples of solid-state devices are flash memory devices, pen drive, SD card etc. They can store data from few gigabytes to up to 128 GB.

1.2 Computer - Software

Software is a set of programs, which is designed to perform a well-defined function. A program is a sequence of instructions written to solve a particular problem.

There are two types of software: -

- **System Software**
- **Application Software**

1.2.1 System Software

The system software is a collection of programs designed to operate, control, and extend the processing capabilities of the computer itself. System software is generally prepared by the computer manufacturers. These software products comprise of programs written in low-level languages, which interact with the hardware at a very basic level. System software serves as the interface between the hardware and the end users.

Some examples of system software are Operating System, Compilers, Interpreter, Assemblers, etc.

- **Operating System**

An Operating System (OS) is the most important software that runs on a computer. OS acts as an interface between the user and the computer hardware and controls the execution of all kinds of programs which is performs all the basic tasks like file management, memory management, process management, handling input and output, and controlling peripheral devices such as disk drives and printers. It also allows you to communicate with the computer without knowing how to speak the computer's language. Without an operating system, a computer is useless.

The Operating System is a program with the following features −

- An operating system is a program that acts as an interface between the software and the computer hardware.
- It is an integrated set of specialized programs used to manage overall resources and operations of the computer.
- It is a specialized software that controls and monitors the execution of all other programs that reside in the computer, including application programs and other system software.

Figure 10: System Software

1.2.2 Application Software

Application software products are designed to satisfy a particular need of a particular environment. All software applications prepared in the computer lab can come under the category of Application software.

Application software may consist of a single program, such as Microsoft's notepad for writing and editing a simple text. It may also consist of a collection of programs, often called a software package, which work together to accomplish a task, such as a spreadsheet package.

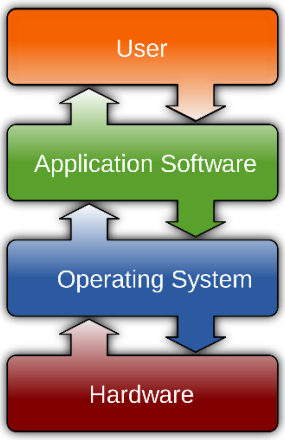

Figure 11: Application Software Location

Examples of Application software are the following: -

- Payroll Software
- Student Record Software
- Inventory Management Software
- Income Tax Software
- Railways Reservation Software
- Microsoft Office Suite Software
- Microsoft Word
- Microsoft Excel
- Microsoft PowerPoint

Figure 12: Application software

Features of application software are as follows: -

- Close to the user
- Easy to design
- More interactive
- Generally written in high-level language
- Easy to understand
- Easy to manipulate and use

Sr.No.	Software	Hardware
1	It is a collection of programs to bring computer hardware system into operation.	It includes physical components of computer system.
2	It includes numbers, alphabets, alphanumeric symbols, identifiers, keywords, etc.	It consists of electronic components like ICs, diodes, registers, crystals, boards, insulators, etc.
3	Software products evolve by adding new features to existing programs to support hardware.	Hardware design is based on architectural decisions to make it work over a range of environmental conditions and time.
4	It will vary as per computer and its built-in functions and programming language.	It is mostly constructed for all types of computer systems.
5	It is designed and developed by experienced programmers in high-level language.	The hardware can understand only low-level language or machine language.
6	It is represented in any high-level language such as BASIC, COBOL, C, C++, JAVA, etc.	The hardware works only on binary codes 1's and 0's.
7	The software is categorized as operating system, utilities, language processor, application software, etc.	The hardware consists of input devices, output devices, memory, etc.

2. Computer Numbering Systems

In computers, Number System is defined as a writing system to represent the numbers in different ways i.e., we are using different symbols and notations to represent numbers. There are four ways we can represent the number.

Computer architecture supports following number systems.

- Binary number system
- Decimal number system
- Octal number system
- Hexadecimal (hex) number system

1. Binary Number System

Binary Number System is a number system in which we represent the numbers by using only two symbols i.e. 0 or 1. The binary system is applied internally by almost all latest computers and computer-based devices because of its direct implementation in electronic circuits using logic gates. Every digit is referred to as a bit.

Example

Binary Number: 10101_2

Calculating Decimal Equivalent:

Step	Binary Number	Decimal Number
Step 1	10101_2	$((1 \times 2^4) + (0 \times 2^3) + (1 \times 2^2) + (0 \times 2^1) + (1 \times 2^0))_{10}$
Step 2	10101_2	$(16 + 0 + 4 + 0 + 1)_{10}$
Step 3	10101_2	21_{10}

Note – 10101_2 is normally written as 10101.

2. Decimal Number System

In decimal number system we have 10 digits – 0 to 9 to represent the numbers. Hence, the base value of the Decimal Number system is 10. Decimal number system is used when there are 10 possible outputs of a system. For example, top 10 students from a class.

The number system that we use in our day-to-day life is the decimal number system. Decimal number system has base 10 as it uses 10 digits from 0 to 9. In decimal number system, the successive positions to the left of the decimal point represent units, tens, hundreds, thousands, and so on.

Each position represents a specific power of the base (10). For example, the decimal number 1234 consists of the digit 4 in the unit's position, 3 in the tens position, 2 in the hundreds position, and 1 in the thousands position. Its value can be written as
(1 x 1000) + (2 x 100) + (3 x 10) + (4 x l)

$(1 \times 10^3) + (2 \times 10^2) + (3 \times 10^1) + (4 \times l0^0)$
1000 + 200 + 30 + 4

- **Decimal to Binary and Binary to Decimal Number System**

Let us convert decimal number $(87)_{10}$ to binary number.

Base of Binary	Decimal Number	Reminder
2	**87**	**1**
2	**43**	**1**
2	**21**	**1**
2	**10**	**0**
2	**5**	**1**
2	**2**	**0**
2	**1**	**1**

So, in the above example. We first identified 2 is the base of the binary (target number system). Then, we divided the given decimal number (87) with the base 2. And then we noted the remainder in every step. And finally, we reversed the remainder and got the answer –

$$\mathbf{(1010111)_2.}$$

Let us convert binary number (1011001)2 to decimal number.

Binary to Decimal

2^{10}	2^9	2^8	2^7	2^6	2^5	2^4	2^3	2^2	2^1	2^0
1024	512	256	128	64	32	16	8	4	2	1
				1	0	1	1	0	0	1

$1011001_2 = 1 \times 64 + 1 \times 16 + 1 \times 8 + 1 \times 1 = 89$

3. Octal Number System

Characteristics of the octal number system are as follows –

- Uses eight digits, 0,1,2,3,4,5,6,7
- Also called as base 8 number system

Example

Octal Number: 12570_8

Calculating Decimal Equivalent:

Step	Octal Number	Decimal Number
Step 1	12570_8	$((1 \times 8^4) + (2 \times 8^3) + (5 \times 8^2) + (7 \times 8^1) + (0 \times 8^0))_{10}$
Step 2	12570_8	$(4096 + 1024 + 320 + 56 + 0)_{10}$
Step 3	12570_8	5496_{10}

Note – 12570_8 is normally written as 12570.

4. Hexadecimal Number System

Characteristics of hexadecimal number system are as follows –

- Uses 10 digits and 6 letters, 0, 1, 2, 3, 4, 5, 6, 7, 8, 9, A, B, C, D, E, F
- Letters represent the numbers starting from 10. A = 10. B = 11, C = 12, D = 13, E = 14, F = 15
- Also called as base 16 number system
- Each position in a hexadecimal number represents a **0** power of the base (16). Example, 16^0
- Last position in a hexadecimal number represents a **x** power of the base (16). Example 16^x where **x** represents the last position - 1

Example

Hexadecimal Number: $19FDE_{16}$

Calculating Decimal Equivalent: -

Step	Binary Number	Decimal Number
Step 1	$19FDE_{16}$	$((1 \times 16^4) + (9 \times 16^3) + (F \times 16^2) + (D \times 16^1) + (E \times 16^0))_{10}$
Step 2	$19FDE_{16}$	$((1 \times 16^4) + (9 \times 16^3) + (15 \times 16^2) + (13 \times 16^1) + (14 \times 16^0))_{10}$
Step 3	$19FDE_{16}$	$(65536 + 36864 + 3840 + 208 + 14)_{10}$
Step 4	$19FDE_{16}$	106462_{10}

Note – $19FDE_{16}$ is normally written as 19FDE.

3. Programming Languages

A **program** is a set of instructions that help computer to perform tasks. This set of instructions is also called as scripts. Programs are executed by processor whereas scripts are interpreted. The languages that are used to write a program or set of instructions are called "**Programming languages**". Programming languages are broadly categorized into three types −

- Machine level language
- Assembly level language
- High-level language

1. Machine Level Language

Machine language is lowest level of programming language. It handles binary data i.e., **0's** and **1's**. It directly interacts with system. Machine language is difficult for human beings to understand as it comprises combination of 0's and 1's. There is software which translate programs into machine level language. Examples include operating systems like Linux, UNIX, Windows, etc. In this language, there is no need of compilers and interpreters for conversion and hence the time consumption is less. However, it is non-readable to humans.

```
00011111100001010101
00111001110011101010
01010101010100000000
10101010101010101010
10101000001111110000
10101010001110001010
10101010100101001000
```

2. Assembly Level Language

Assembly language is a middle-level language. It consists of a set of instructions in a specific format called **commands**. It uses symbols to represent field of instructions. It is very close to machine level language. The computer should have assembler to translate assembly level program to machine level program. Examples include ADA, PASCAL, etc. It is in human-readable format and takes lesser time to write a program and debug it. However, it is a machine dependent language.

Assembly Language	Machine Code
SUB AX, BX	0010101110000011
MOV CX, AX	100010111001000
MOV DX, 0	10111010000000000000000

3. High-level Language

High-level language uses format or language that is most familiar to users. The instructions in this language are called **codes** or **scripts**. The computer needs a compiler and interpreter to convert high-level language program to machine level language. Examples include C++, Python, Java, etc. It is easy to write a program using high level language and is less time-consuming. Debugging is also easy and is a human-readable language. Main disadvantages of this are that it takes lot of time for execution and occupies more space when compared to Assembly- or Machine-level languages. Following is a simple example for a high-level language.

```
if age < 18 {
  printf("You are not eligible to vote");
} else {
  printf("You are eligible to vote");
}
```

4. Information Technology

Information technology (IT) is the use of any computers, storage, networking and other physical devices, infrastructure and processes to create, process, store, secure and exchange all forms of electronic data. Typically, IT is used in the context of enterprise operations as opposed to personal or entertainment technologies. The commercial use of IT encompasses both computer technology and telephony.

Information Technology (IT) is a business sector that deals with computing, including hardware, software, telecommunications and generally anything involved in the transmittal of information or the systems that facilitate communication. IT typically refers to equipment such as computers, data storage devices, networks and also communication devices. Information Technology means the use of hardware, software, services and supporting infrastructure to manage and deliver information using voices, data and video. Information Technology "IT" is one of the fastest growing industry in today's unstable economy. Why? Because many businesses, Government organizations, Industries want to automate their business and day-to-day processes.

1.2.1 Information Technology Examples

1. Software and support for office automation systems such as word processing and spreadsheets, as well as the computer to run them.
2. Data networks and all associated communications equipment such as servers, bridges, routers, hubs and wiring.
3. Peripherals directly connected to computer information systems used to collect or transmit audio, video or graphic information, such as scanners and digitizers.
4. Voice response systems that interact with a computer database or application.
5. Video conferencing equipment.
6. The state radio communications network.
7. Computers and network systems used by teachers, trainers and students for educational purpose.
8. "Open" computer systems that monitor or automate mechanical or chemical processes and also store information used by computer applications for analysis and decision making.

Q: What is the difference between information technology and computer science?