Lecture 6

University of Anbar

Civil Engineering Department

MSc- Highway Engineering

Railway and Airport Engineering

Geometric Design of Railway Track

- Choice of Route and Level
- Braking Distance for Trains
- Sight Distance at Railway Tracks

Instructor : Dr. Hameed Aswad Mohammed

Choice of Route and Level

- In the earliest stages of planning of any railway, choices have to be made relating to the best route, and which parts will need to be elevated or in a tunnel.
- The route will be largely dictated by traffic demands and existing physical constraints, although in some instances, alternatives might be available where engineering and cost variations should be compared.
- In such cases, ground conditions and water levels as well as existing building foundations and services must all be taken into consideration.
- Again, the level of the railway will be determined by existing physical constraints.

Choice of Route and Level

- It is essential however that all engineering implications are fully investigated and costed before any decision is made to construct a railway, either underground or on an elevated structure.
- For underground construction full allowance must be made for the ‘full life’ costs of escalators, ventilation/air conditioning, lighting and other services, additional tunneled accommodation for staff, fire protection and emergency exits etc.
- Disruption during the construction period of works in inner-city areas is a factor that needs also to be taken into account when deciding whether or not to go underground.

Choice of Route and Level

- Before adopting any form of the elevated railway there needs to be a careful consideration of environmental issues including visual impact and noise as well as dealing with emergencies at a high level.
- Although elevated railways occupy less ground-level space than surface railways, the stations often cover more relative area because of the need for stairs, ramps and escalators, etc.
- From an engineering point of view also alignments should be as smooth as possible without steep gradients or tight curves to reduce wear on both the rolling stock and the track and to keep power consumption to a minimum.

Braking Distance for Trains

- It is the distance traveled by train to come to rest after the brakes have been applied.
- It is, however, different from that for automobiles in that the braking distance for a given train may be significantly different from that for another train.
- Train braking distance is of importance in the design of the signaling system of the railroad.
- It may be computed from empirical equations or by conducting dynamic tests using a specific type of train on the rail line of interest.

Types of Braking System

- Shoe (block) brakes or disc brakes.

operate by pressure being applied on the metal shoes, which results in a friction force being applied to the wheels. The braking shoes are provided on both wheels of the axle being braked.

- Disc brakes

operate by the action of friction on steel discs or cast iron fixed to the axle.

Methods to Transmit the Braking Force

- **Air braking**: The air pressure in special conduits is changed by operating a valve in the driver's cab. The disadvantage of this system is that the braking force is not simultaneously applied to all train vehicles.
- **Electro-pneumatic**: In this system an electric signal is transmitted online along the train that is used to simultaneously modify air pressure on all wheels through electrically-actuated air valves in each brake.
- **Electromagnetic braking**: In this system the braking force is applied directly to the rails by special electromagnetic shoes, which carry a current during braking. This system may operate independently or in combination with other systems.
- **Electrodynamic braking**: Deceleration is achieved by converting the electric traction motors into electric generators, thereby eliminating the problem of brake shoe wear.

The Braking Distance of Trains

- Incorporated factors include user-specified train compositions such as multiple train lengths, user-specified settings and parameters, and rear-wheel to coupler overhang distance, with the ability to process multiple velocities for a single location.
- Results have indicated that the braking distance of a train could range from about 79 m for an initial speed of 19 km/h to 2900 m for an initial speed of 160 km/h.
- German Railways developed two empirical equations, one for passenger trains and the other for freight trains. These are referred to as the Minden formulae and are given as follows:

Minden Formulae Braking Distance of Trains

$$L(m) = \frac{3.8u^2}{6.1\psi(1 + {}^{\lambda}/_{10}) + i} \tag{3.22}$$

For freight trains:

$$L(m) = \frac{3.85u^2}{\left[5.1\psi\sqrt{(\lambda - 5)} + i\right]} \tag{3.23}$$

where

$L(m)$ = braking distance (m)

u = speed of the train (km/hr)

λ = braking percentage (i.e., the ratio of the braking force required for braking 1 metric ton to the total vehicle weight)

ψ = a constant depending on the brake type characteristics. Values range from 0.5 to 1.25

Stopping Distance of Passenger Trains

Belgian Railways have also developed the empirical formula given in Equation 3.24:

$$L(m) = \frac{4.24u^2}{\left[\lambda\left(\frac{57.5u}{u - 20}\right)\right] + 0.05u - i} \tag{3.24}$$

where $L(m)$, λ, and u take the same definitions as those for Equations 3.22 and 3.23.

Sight Distance at Railway Tracks

- In general, railway tracks are not designed to provide a *minimum sight distance* that will allow a train traveling at a high speed to stop if the driver observes an object on the track.
- The reason is that braking distances of trains can be very high compared to those for automobiles, and it is not feasible to provide sight distances on curves that will allow the train to be stopped before colliding with an object that is observed on the track.
- Sharp horizontal and vertical curves are therefore avoided in railway track design.
- However, at railway/highway grade crossings with warning devices that allow the driver of an approaching vehicle to determine whether a danger exists because of an approaching train (passive control), the decision to stop or proceed across the crossing is made entirely by the automobile driver.
- Sufficient sight distance should therefore be provided for drivers of the automobile to safely proceed across the grade crossing when they see the oncoming train.

Sight Distance Requirements at Passive Controlled Railroad Crossings

When drivers of automobiles approach a passive controlled railway crossing, they have two main options:

- The driver stops at the stop line having seen the approaching train.
- The driver, having seen the train, continues to cross the tracks safely before the train arrives.

Conditions for A Moving Vehicle to Safely Stop or Cross At A railroad/Highway Crossing

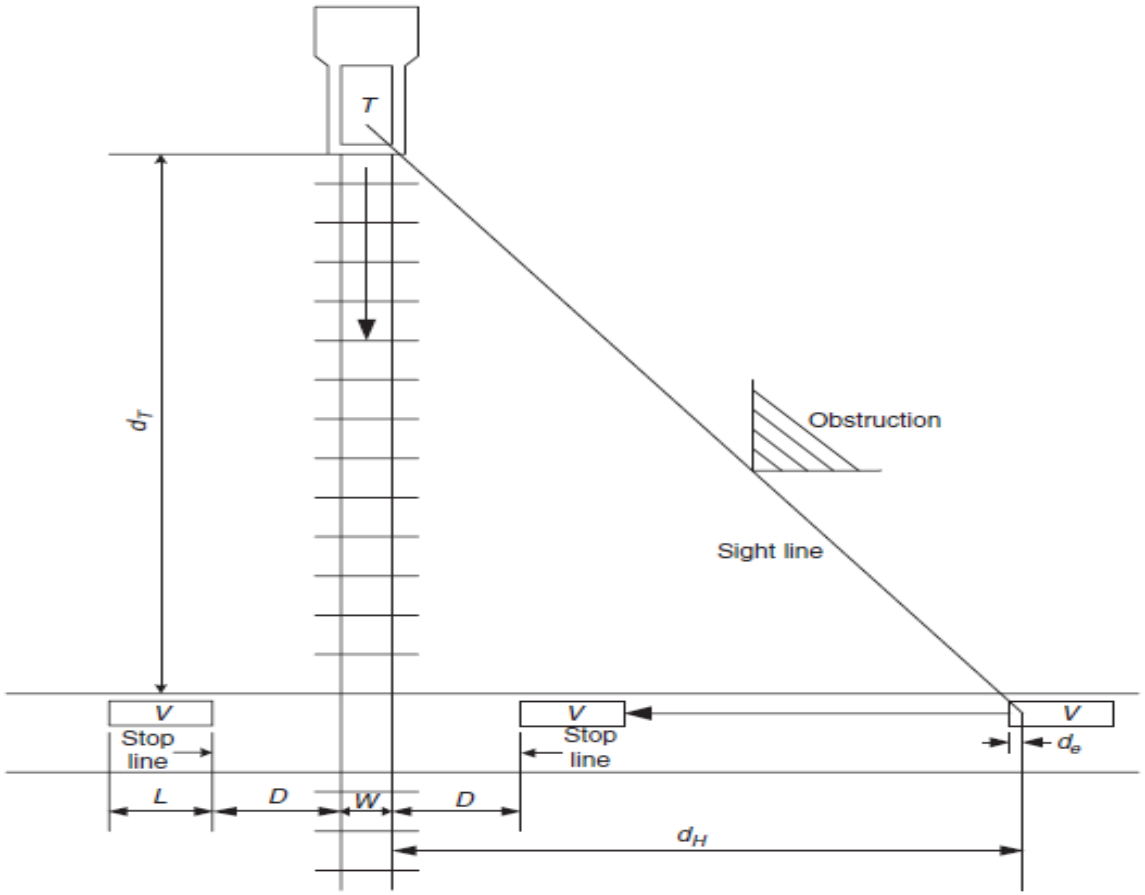

Conditions for A moving Vehicle to Safely Stop or Cross at A railroad/Highway Crossing

- The minimum distance (stopping distance) required for the driver to stop at the stop line is given by:

$$S = 0.28ut + \frac{u^2}{254.3\,(0.35 + G)}$$

Conditions for A moving Vehicle to Safely Stop or Cross at A railroad/Highway Crossing

- Therefore, the minimum distance (dH) the driver's eyes should be from the track is the sum of the stopping distance, the distance between the stop line and the tracks, and the distance between the driver's eyes and the front of the vehicle's wheels.

$$d_H = 0.28u_v t + \frac{u_v^2}{254.3\,(0.35 + G)} + D + d_e$$

Conditions for A moving Vehicle to Safely Stop or Cross at A railroad/Highway Crossing

If it is assumed that the road approaches to the railroad crossing have zero grades, dH is obtained as

$$d_H = 0.28u_v t + \frac{u_v^2}{89} + D + d_e$$

Uv = speed of the vehicle (km/h)

t = perception reaction time of the driver

D = distance from the stop line or the front of the vehicle to the nearest rail assumed to be 4.5 m

de = distance from the driver to the front of the vehicle, assumed to be 2.4 m

Conditions for A moving Vehicle to Safely Stop or Cross at A railway/Highway Crossing

- If the driver continues to cross the tracks, the total distance travelled to clear the track is the sum of d**H**, the width of the track (W), the distance between the tracks and the stop line on the other side of the tracks (D), and the length of the vehicle (L).
- The sight distance leg (d**T**) on the railroad track is the distance travelled by the train during the time the automobile is traveling this total distance, and is given as

$$d_T = \frac{u_T}{u_v}\left(0.28u_v t + \frac{u_v^2}{89} + 2D + L + W\right)$$

Conditions for A moving Vehicle to Safely Stop or Cross at A railway/Highway Crossing

- Similarly, if the vehicle is stopped at the stop line, a sight distance along the length of the track should be provided to allow the driver to accelerate the vehicle and safely cross the tracks before the arrival of a train that appears just as the driver starts his or her maneuver.
- The sight distance along the railroad track is given by

$$d_T = 0.28u_T\left[\frac{u_g}{a_1} + \frac{L + 2D + W - d_a}{u_g} + J\right]$$

Conditions for a Stopped Vehicle to Safely Depart and Cross A single Railway track

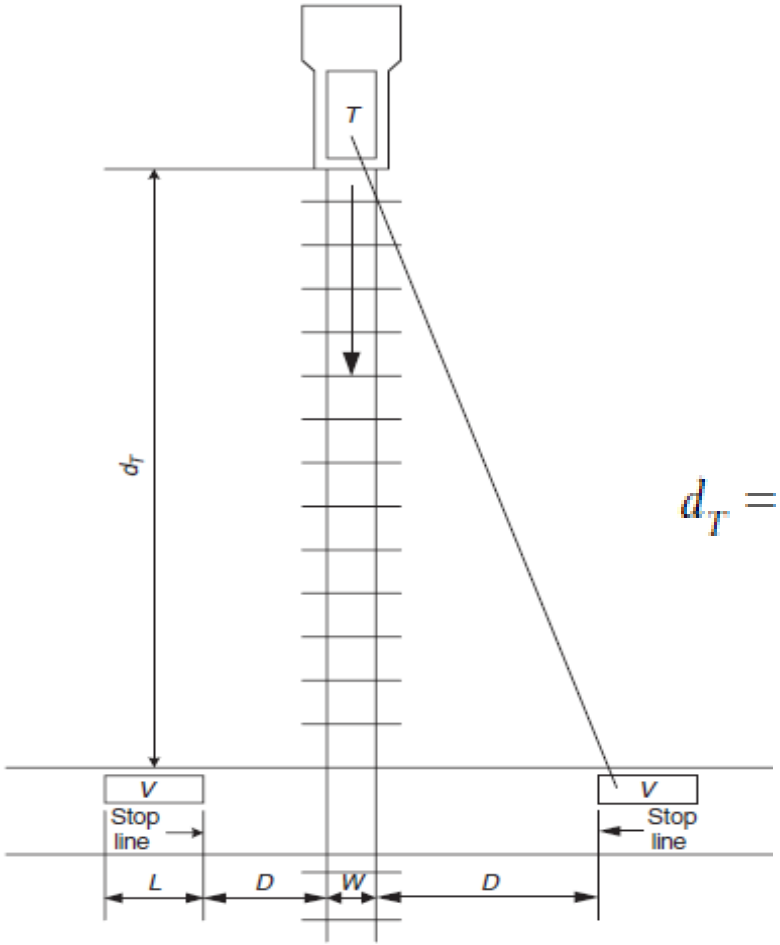

$$d_T = 0.28u_T\left[\frac{u_g}{a_1} + \frac{L + 2D + W - d_a}{u_g} + J\right]$$

Conditions for a Stopped Vehicle to Safely Depart and Cross A single Railway Track

- dT = sight distance leg along railroad tracks to permit the vehicle to cross the tracks from a stopped condition
- UT = speed of train, km/h
- Ug = maximum speed of vehicle in first gear, assumed to be 2.68 m/s
- a1 = acceleration of vehicle in first gear, assumed to be 0.45 m/s2
- L = length of vehicle, assumed to be 19.8 m
- D = distance of stop sign to nearest rail, assumed to be 4.5 m
- J = sum of perception time and time to activate clutch or automatic shift, assumed to be 2 s
- W = distance between outer rails, for a single track; this value is 1.52 m
- da = distance vehicle travels while accelerating to maximum speed in first gear

$$d_a = \frac{u_g^2}{2a_1} = \frac{2.68^2}{2(0.45)} = 7.98 \text{ m}$$

Required Design Sight Distance for Combination of Highway and Train Vehicle Speeds; 20 m (65 ft) Truck Crossing a Single Set of Tracks at 90 Degrees

Train Speed (mph)	Case B Departure from Stop	Case A Moving Vehicle							
		Vehicle Speed (mph)							
	0	10	20	30	40	50	60	70	80
		Distance along railroad from crossing, d_T (ft)							
10	240	146	106	99	100	105	111	118	126
20	480	293	212	198	200	209	222	236	252
30	721	439	318	297	300	314	333	355	378
40	961	585	424	396	401	419	444	473	504
50	1201	732	530	494	501	524	555	591	630
60	1441	878	636	593	601	628	666	709	756
70	1681	1024	742	692	701	733	777	828	882
80	1921	1171	848	791	801	838	888	946	1008
90	2162	1317	954	890	901	943	999	1064	1134
		Distance along highway from crossing, d_H (ft)							
		69	135	220	324	447	589	751	931

Note: 1 mph = 1.61 km/h; 1 ft = 0.3 m