جامعة الانبار

كلية العلوم قسم الجيولوجيا التطبيقية-

اسم المادة بالعربي :الطرق الكهربائية

اسم المادة بالإنكليزي: Electrical Methods

عنوان المحاضرة: Field Application

اسم المحاضر :الاستاذ الدكتور علي مشعل عبد حمد الحلبوسي

Field Application

Known cavities are chosen and their dimensions are measured within the preliminary field work. The direction and distance of the survey traverses are located in order to determine the position and the number of the soundingstations at each traverse by the aid of topographic map, compass, and GPS instrument, taking in a account to keep away from noise sources which may affect the measurements. The distribution of survey traverse must cover most dimensions of the studied cavities. The electrode spacing are chosen at each survey line so as to accurately obtain the depth required.

Before starting the field work, the field instruments are prepared for carrying out the work. The preparation has included modification and making (80) electrodes, because the two-dimension electrical imaging survey are usually carried out using large number of electrodes (25 or more).

Terrameter SAS 4000 Instrument

The Terrameter SAS 4000 can operate in three modes (Fig.3-1):

1) In the resistivity surveying mode, it comprises a battery powered deep-penetration resistivity meter with an output sufficient for a current electrode separation of 2000 meters under good surveying conditions. Discrimination circuitry and programming separates DC voltages, self potential and noise from the incoming signal. The ratio between voltage and current (V/I) is calculated automatically and displayed ohms or milliohms. If array geometry data is available, apparent resistivity can be displayed. The overall range thus extends from 0.05 milliohms to 1999 kiloohms.

Figure (1) Terrameter SAS 4000 instrument.

2) In the Induced Polarization(IP) mode the SAS 4000 measures the transient voltage decay in a number of time intervals. The length of the time interval can be constant or increasing with time. The IP effect is terms of chargeability (msec V/V).

3) In the voltage measuring mode, the SAS 4000 comprises a self potential instrument that measures natural DC potentials . The result is displayed in V or mV. Optional non-Polaris able electrodes are available for e.g. self potential surveys.

A useful facility of the Terrameter SAS 4000 is its ability to measure in four channels simultaneously. This implies that in addition to resistivity and IP measurements, it can perform four times faster. The electrically isolated transmitter sends out well-defined and regulated signal currents, with a strength of up to 1000 mA and a voltage of up to 400 V (limited by the output power 100 W). The receiver discriminates noise and measures voltages

correlated with transmitted signal current (resistivity surveying mode and IP mode) The microprocessor monitors and controls operations and calculates results.

In geophysical surveys, the SAS 4000 permits natural or induced signals to be measured at extremely low levels, with excellent penetration and low power consumption. Moreover, it can be used in a wide variety of applications where effective signal/noise discrimination is needed. It can be used to determine the ground resistance of grounding arrangement at power plants and along power lines and (in a pinch) it can even be used as an ohmmeter.

Some of the highlights in the specifications characterizing the SAS 4000 Terrameter are listed below:

1- Resolution 1 mV (at 0.5 sec integration time).

2- Bit stream A/D conversion.

3- Three automatically selected measurement ranges (±250 mV, ±10Vand ±400V).

4- Dynamic range as high as 140 dB at 1 sec integration time , 160 dB at 8 sec integration time.

5- Precision and accuracy better than 1% over whole temperature range.6-

Galvanic separated input channels (SAS 4000).

7- Built-in PC compatible microcomputer.

8- More than 1,000,000 data points can be saved on the internal flash disk.

9- Fast and highly time-efficient data acquisition. To turn on the SAS 4000, press the lower knobs toward each other as indicated by the ON/OFF symbol

on the instrument panel (Fig. 3-1). A LED (Light Emitting Diode) indicates that the instrument is starting, and after approximately 20 sec the start menu comes up on the display. During the start-up process of the SAS 4000 you should avoid touching the knobs. To turn OFF, press the two knobs towards each other until the " power OFF " dialog box appears on the screen, then accept OK. This will initiate the computer to close all files and safely switch off.

Keeping the two knobs towards each other for an extended period of time, will cut the instrument power regardless computer activities, data and setting may not be saved.

Selection of Array Parameters

ElectrePro program is used to select the parameters such as a-spacing, n-factor, and depth of investigation before carrying out the field work (this program is designed by IRIS Instruments, and it is a software that allow us to create 2D /3D and borehole sequences of resistivity measurements). Each

Table (1) The median depth of investigation (Ze) for different electrode arrays (after Edwards 1977 in Loke, 2012)

	Ze/a	Ze/L	GeometricFactor	Inverse Geomet Factor
Dipole-Dipole n=1	0.416	0.139	18.850	0.05305(0.3333)
n=2	0.697	0.174	75.398	0.01326(0.0833)
n=3	0.962	0.192	188.50	0.00531(0.0333)
n=4	1.220	0.203	376.99	0.00265(0.0166)
n=5	1.470	0.211	659.73	0.00152(0.0096)
n=6	1.730	0.216	1055.6	0.00095(0.0060)
n=7	1.983	0.220	1583.4	0.00063(0.0040)
n=8	2.236	0.224	2261.9	0.00044(0.0028)
Wenner-Schlumberger n=1	0.519	0.173	6.2832	0.15915(1.0000)
n=2	0.025	0.186	18.850	0.05305(0.3333)
n=3	1.318	0.189	37.699	0.02653(0.1662)
n=4	1.706	0.190	62.832	0.01592(0.1000)
n=5	2.093	0.190	94.248	0.o1061(0.0667)
n=6	2.478	0.191	131.95	0.00758(0.0476)
n=7	2.863	0.191	175.93	0.00568(0.0357)
n=8	3.247	0.191	226.19	0.00442(0.0278)
n=9	3.632	0.191	282.74	0.00354(0.0222)
n=10	4.015	0.191	345.58	0.00289(0.0182)
P0le-dipole n=1	0.519	0.296	12.566	0.07958(0.5000)
n=2	0.925	0.308	37.699	0.02653(0.1667)
n=3	1.318	0.330	75.398	0.01326(0.0833)
n=4	1.706	0.341	125.66	0.00796(0.0500)
n=5	2.093	0.349	188.50	0.00531(0.0334)
n=6	2.478	0.354	263.89	0.00379(0.0238)
n=7	2.863	0.358	351.86	0.00284(0.0178)
n=8	3.247	0.361	452.39	0.00221(0.0139)

array has 22 electrode with a-spacing of 2m for Dipole-dipole and Pole-dipole arrays, while Wenner- Schlumberger has 24 electrodes with a-spacing of 2m. The most important parameters are a-spacing and n-factor. The main object of these parameters is to select the suitable sequence to achieve real subsurface imaging. In 2D imaging, each array has advantages and disadvantages for the investigation depth, data coverage, signal strength, and sensitivity function to vertical and horizontal change in resistivity (Zhou et al. 2002 and Loke, 2012). In Dipole-dipole array, when n-factor changes from 1 to 6 (the maximum), the estimated depth of investigation reaches 8.29m with coverage data equals to 171 reading (Fig., 3-2), but when n-factor changes from 1 to 8 the maximum estimation of depth of investigation become 9.7m with 197 reading. This means that increasing n-factor, greater estimated depth

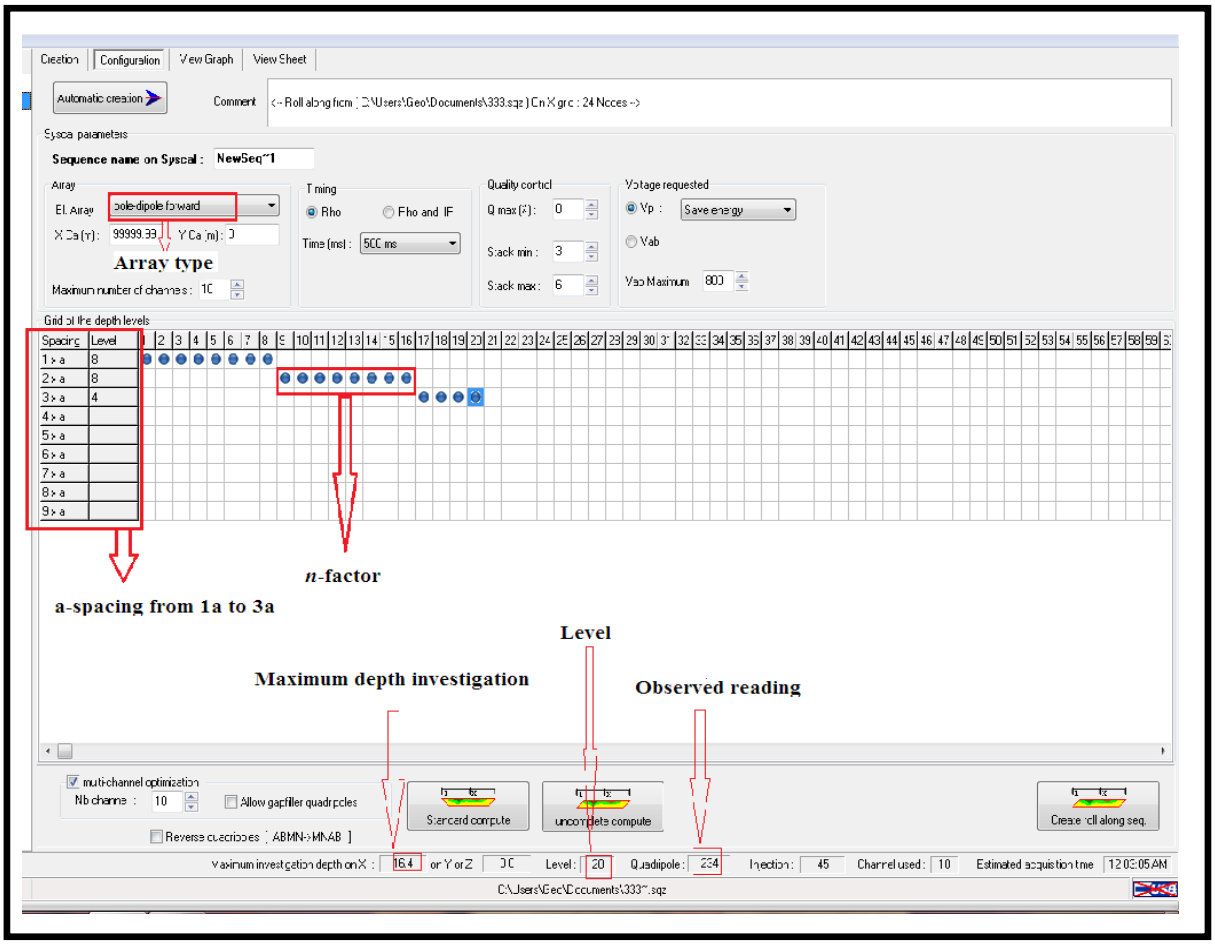

Figure (2) Selecting a-spacing, n-factor, and data levels by ElectrePro program.

of investigation and more horizontal and vertical coverage data can be obtained. But, it is not preferable to increase n-factor to more than 6, for Dipole-dipole array because after this value, the accurate measurements of the potential decreases, and the noise will increase.

Data Format for 2D Imaging Arrays

The Dipole-dipole, Wenner-Schlumberger, and Pole-dipole arrays involve an additional parameter in the RES2DINV data format. For these arrays, the "a" spacing is defined as the distance between the P1 and P2 potential electrodes. The second parameter is related to the distance between the C1 and P1 electrodes. By convention, the distance between the C1 and P1 electrodes for the Dipole-dipole array is given as "na", where "n" is the ratio of the C1-P1 distance to the P1-P2 distance. The "n" factor is frequently an integer, but no integer values can also be used with the RES2DINV program. The data file distributed with the RES2DINV program package is an example with non-integer values for the "n" factor for some of the readings.

Using this data file as a guide, the format for the Dipole-dipole array is given below Table (3-3).

Table 3-3 : Example of a Dipole-dipole array data set of 2D imaging survey .

```
Um El-Githoaa cavity| Header with title
2.00                | Smallest or unit electrode spacing
3                   | Array type (3 for dipole-dipole, 6 for pole-dipole, 7 for W-S)
171                 | Number of data points
1                   | 1 to indicate center of electrode array is given as x-location
0                   | 0 to indicate no IP
1.50 1.00 1.0 9.92  | The x-location, "a" spacing, "n" factor, apparent resistivity value
2.50 1.00 1.0 9.89  | Same format for each data point
3.50 1.00 1.0 9.85  |
.
.
2.50 2.00 0.5000 9.89 | Example with non-integer "n" value
3.50 2.00 0.5000 9.78 | Note that "n" is 0.5 and "a" is twice the unit electrode spacin
3.50 2.00 1.5000 9.88  | Another example with non-integer "n"
4.50 2.00 1.5000 14.54 | which is equals to 1.5 in this case
.
.
5.00 3.00 1.3333 7.96  | Note "n" is 4/3, and "a" is 3 times the unit electrode spacing
6.00 3.00 1.3333 11.06 |
.
.
37.00 3.00 6.0000 10.96 | Last two data points
38.00 3.00 6.0000 10.87 |
0 | Followed by a few 0's
0
```

The same data format is used for the Pole-dipole and the Wenner-Schlumberger arrays with the "a" and "n" factors as defined in Figure (3-7). For these arrays, the "n" factor is usually an integer value, but fractional values can also be accepted by the RES2DINV program.

For the "normal" or "forward" Pole-dipole array, it is assumed that the C1 current electrode is to the left of the P1 potential electrode (Figure 3-7b),
i.e. the x-location of the C1 electrode is less than the x-location of the P1 electrode. When the C1 electrode is to the right of the P1 electrode, it is referred to as the "reverse" Pole-dipole array. To distinguish it from the "forward" pole-dipole arrangement, a negative value is used for the "n" factor in the RES2DINV data format.

For both the "forward" and "reverse" Pole-dipole arrays, the x-location for the center of the array is defined as the mid-point between the C1 and P2 electrode (i.e. the location of the P1 electrode is not used in the determination of the array center).

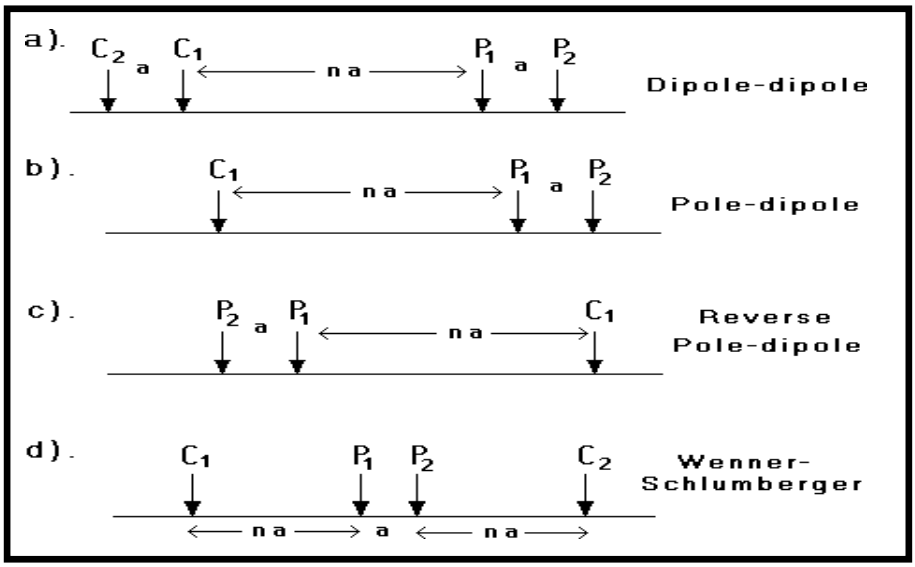

Figure (3-7) Arrangement of the electrodes for the Dipole-dipole, Pole-dipole and Wenner-Schlumberger arrays, together with the definition of the "a" spacing and the "n" factor for each array(Loke,2011).

References

Abed, A. M., 2013. Comparison between 2D electrical imaging survey and traditional electrode arrays in delineating subsurface cavities in Haditha-Hit area (Western Iraq). Ph.D. Thesis, Geology Department, Science College, Baghdad University, Baghdad, Iraq, pp: 120.

Loke, M. H., 2020. Tutorial: 2-D and 3D electrical imaging surveys, Geophys10(4):339–349E-mail:drmhloke@yahoo.com, geotomo@gmail.com, p 176.

AL-Menshed, F.H, 2011. Evaluation of resistivity method in delineation ground water hydrocarbon contamination southwest of Karbala city. Unpublished, PhD thesis. University of Baghdad, college of science.