Logic Circuits Course

Ch.10

Memory and Storage

Dr. Abul Kareem Alaloosy

Memory and Storage

1- Memory Basics
2- The Random-Access Memory (RAM)
3- The Read-Only Memory (ROM)
4- Programmable ROMs
5- The Flash Memory
6- Memory Expansion
7- Special Types of Memories
8- Magnetic and Optical Storage

Introduction

- Computers and other types of systems require the permanent or semi-permanent storage of large amounts of binary data.
- Microprocessor based systems rely on storage devices and memories for their operation because of the necessity for storing programs and for retaining data during processing.
- In computer terminology, memory usually refers to RAM and ROM
- Storage refers to hard disk, floppy disk (magnetic storage media), and CD-ROM (optical storage media) .

1. Memory Basics

- Memory is the portion of a system for storing binary data in large quantities. Semiconductor memories consists of arrays of storage elements that are generally latches.

Units of Binary Data: Bits, Bytes, Nibbles, and words

- Bit :- is the smallest unit of binary data.
- Byte :- In many application, data are handled in an 8-bit unties.

- Nibbles :- If the byte can be split into two 4-bit units, it is called nibbles
- Word :- A complete unit of information is called a ward and generally consists of one or more bytes

The Basic Semiconductor Memory Array

- Memories are made up of arrays of cells, each cell retain a 1 or 0. Each block in the memory array represents one storage cell and its location can be identified by specifying a row and a column.
- A memory can be identified by the number of words it can store times the word size. The actual number of words is always a power of 2.

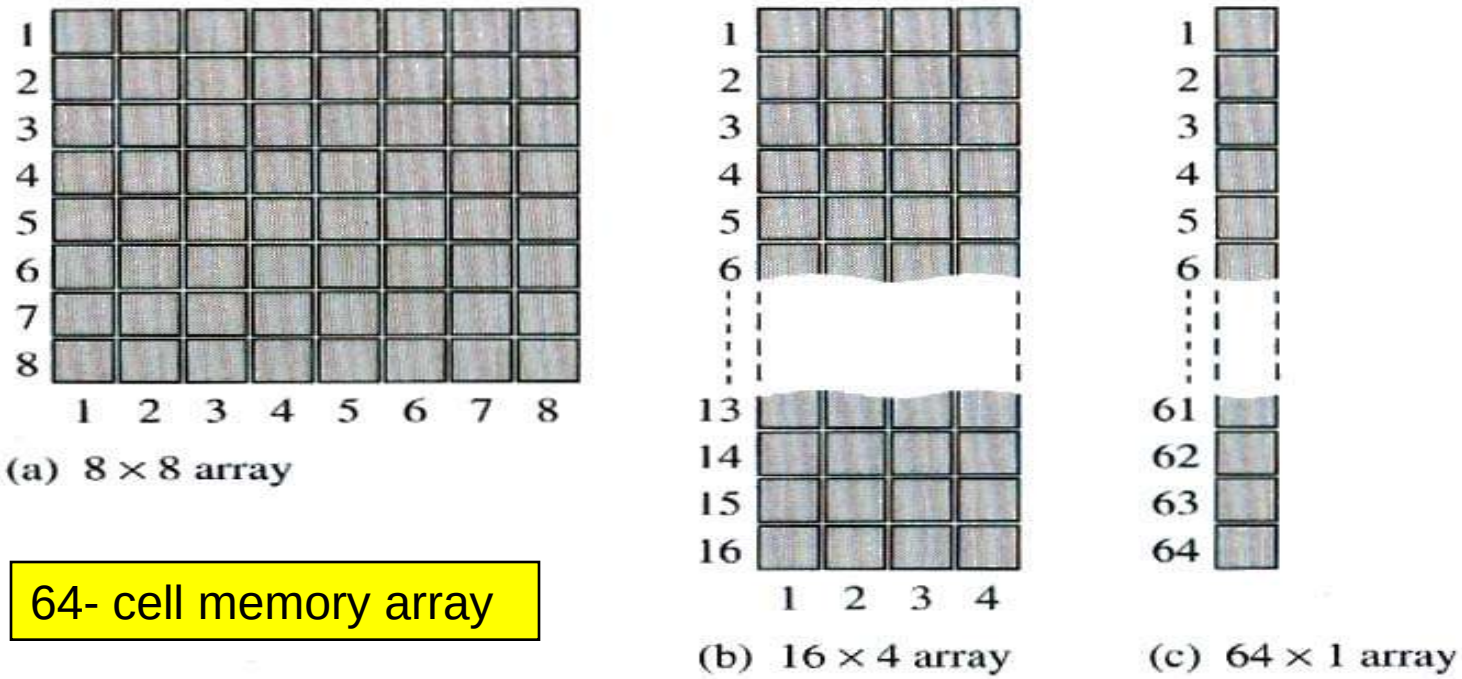

64- cell memory array

The Basic Semiconductor Memory Array

- Memories are made up of arrays of cells, each cell retain a 1 or 0. Each block in the memory array represents one storage cell and its location can be identified by specifying a row and a column.
- A memory can be identified by the number of bytes it can store times (ex. 16K memory can store 16,384 bytes of 8 bits each). The actual number of bytes is always a power of 2 (16,384= 2^{14}).

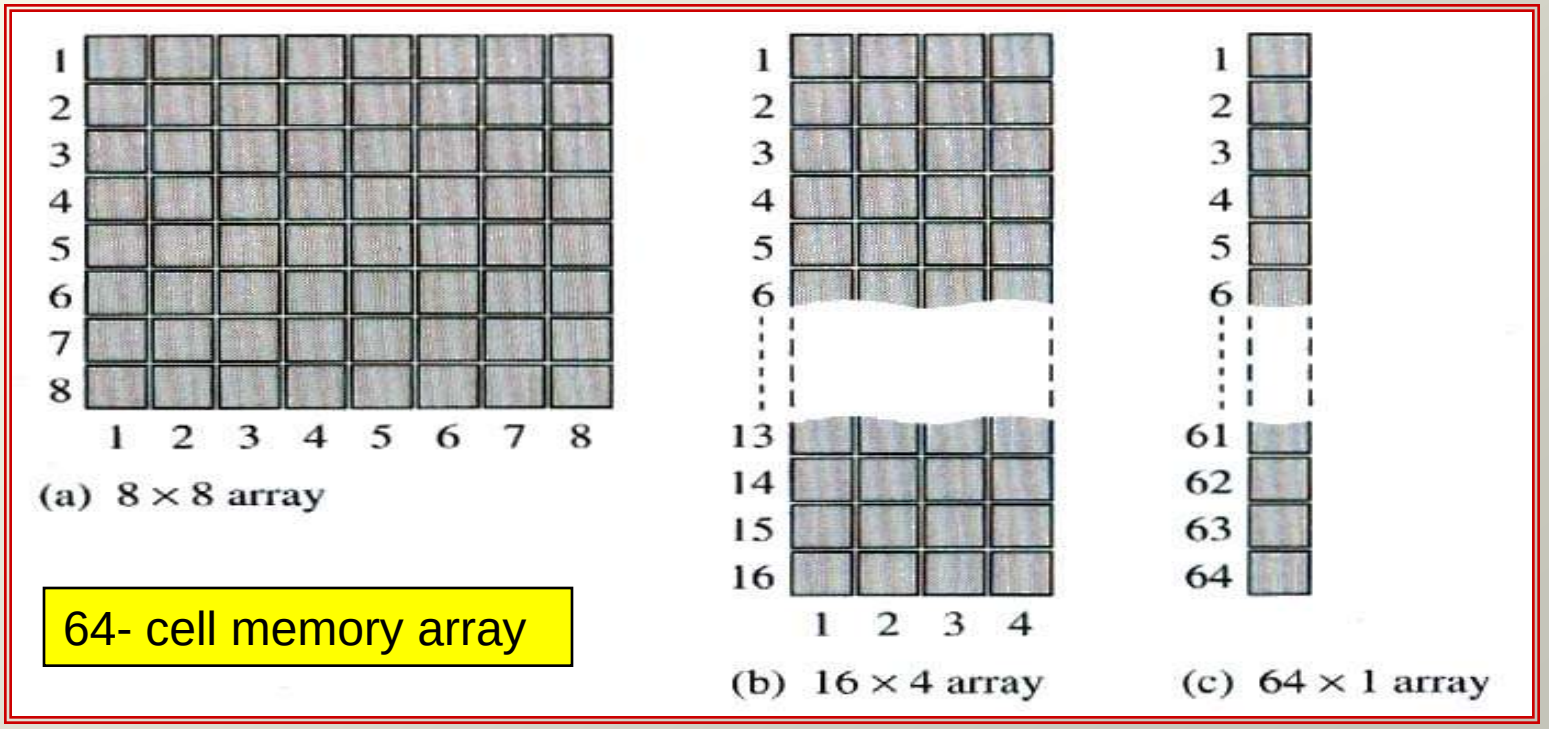

64- cell memory array

Computer memories are organized into multiples of bytes called words. Generally, a word is defined as the number of bits handled as one entity by a computer. By this definition, a word is equal to the internal register size (usually 16, 32, or 64 bits).

Memory Address and Capacity

- The location of a unit of data in a memory array is called its **address**. In PCs, a byte is the smallest unit of data that can be accessed. In a 2-dimensional array, a byte is accessed by supplying a row number.

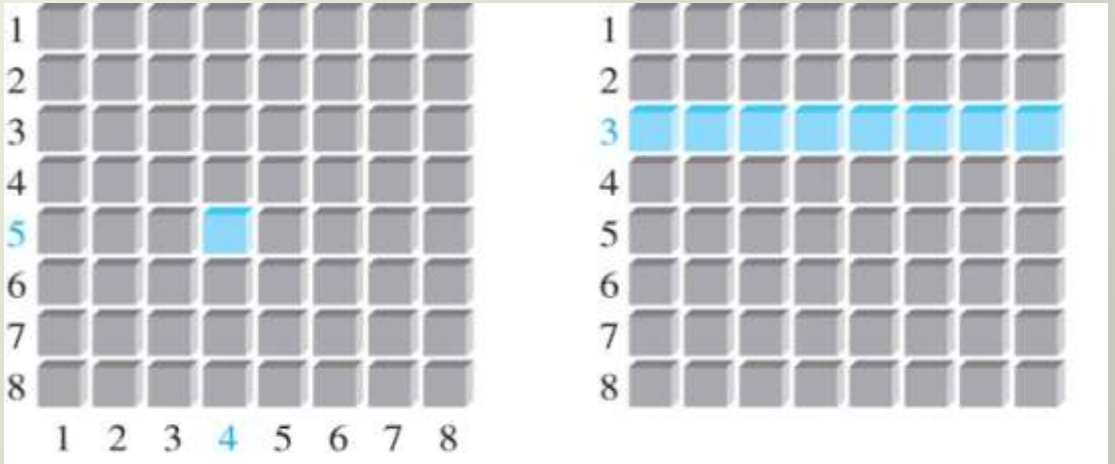

(a) The address of the blue bit is row 5, column 4.

(b) The address of the blue byte is row 3.

A 3-dimensional array is arranged as rows and columns. Each byte has a unique row and column address.

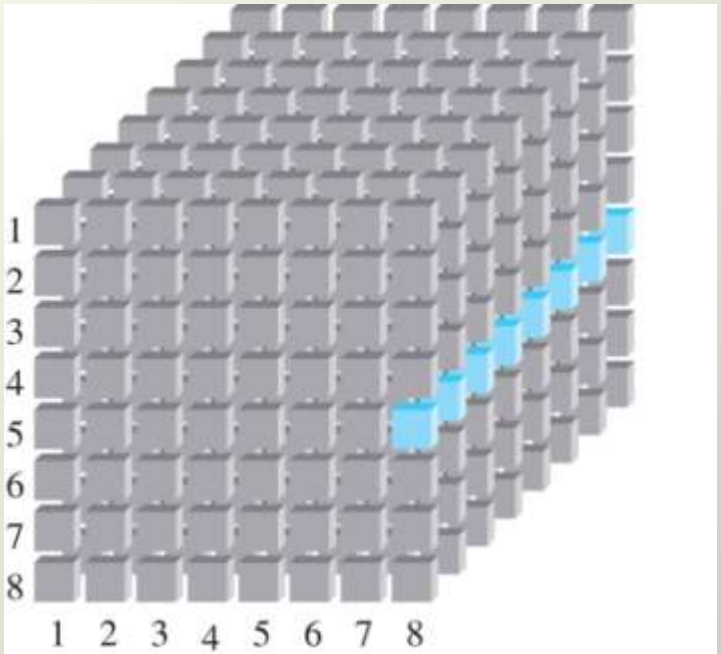

The address of the blue byte is row 5, column 8.

The capacity of a memory is the total number of data unit that can be stored. Above figure shows capacity of 64 bytes.

This example is (of course) only for illustration. Typical computer memories have 256 MB or more of capacity.

Basic Memory Operation

Since memory stores binary data, data must be put into the memory and data must be copied from the memory when needed.

- The **write** operation puts data into a specified address in the memory and the **read** operations copies data out of specified address.
- The addressing operation, which is part of both the write and the read operations, selects the specified memory address.
- In order to read or write to a specific memory location, a binary code is placed on the **address bus**. Internal decoders decode the address to determine the specific location. Data is then moved to or from the **data bus**.
- Memory have read **RE** and write **WR** control signals and chip select **CS** signals and output enable **OE** signal which is active during read. Depending on the type of memory, other signals may be required.

Block diagram of a 2-dimensional memory and a 3-dimensional memory showing address bus, address decoder(s), bidirectional data bus, and read/write inputs.

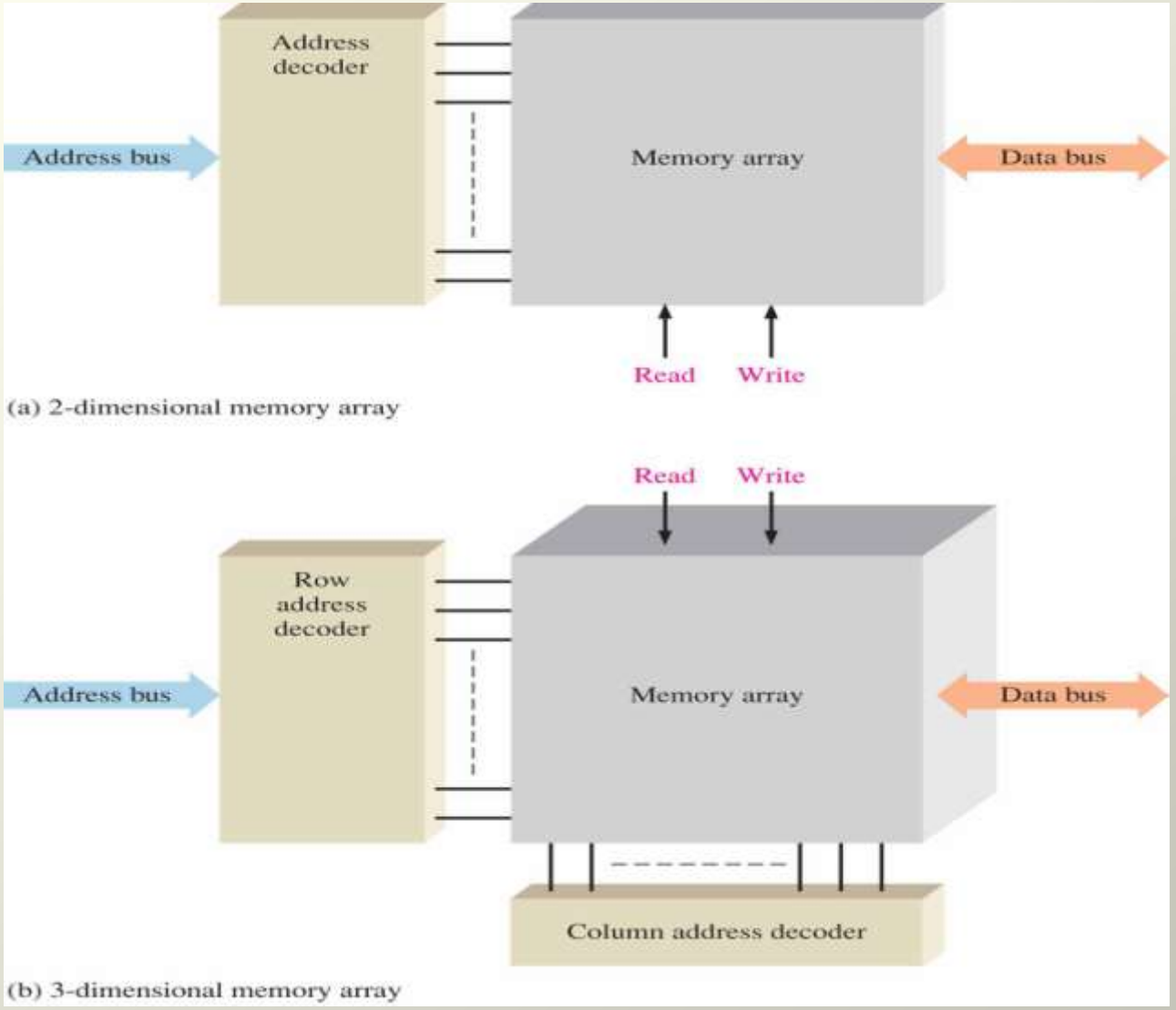

The Write Operation :- To store a byte of data in the memory, a code held in the address register is placed on the address bus. Once the address code is on the bus, the address decoder decodes the address and selects the specified locations in the memory. The memory then gets a write command, and the data byte held in the data register is placed on the data bus and stored in the selected memory address, thus completing the write operation.

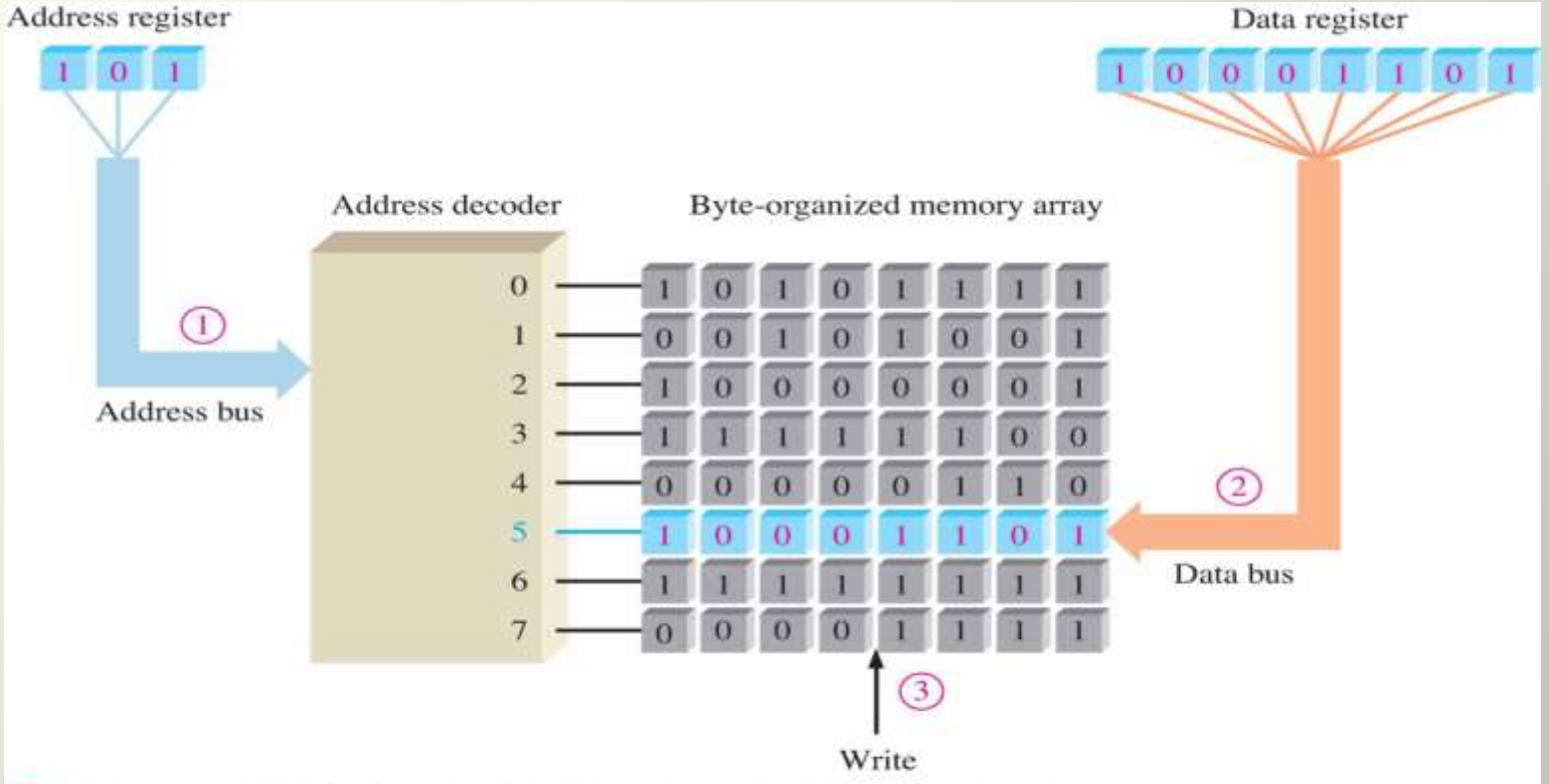

① Address code 101 is placed on the address bus and address 5 is selected.
② Data byte is placed on the data bus.
③ Write command causes the data byte to be stored in address 5, replacing previous data.

The Read Operation :- a code held in the address register is placed on the address bus. Once the address code is on the bus, the address decoder decodes the address and selects the specified location in the memory. The memory then gets a read command and a "copy" of the data byte that is stored in the selected memory address is placed on the data bus and loaded into the data register, thus completing the read operation .

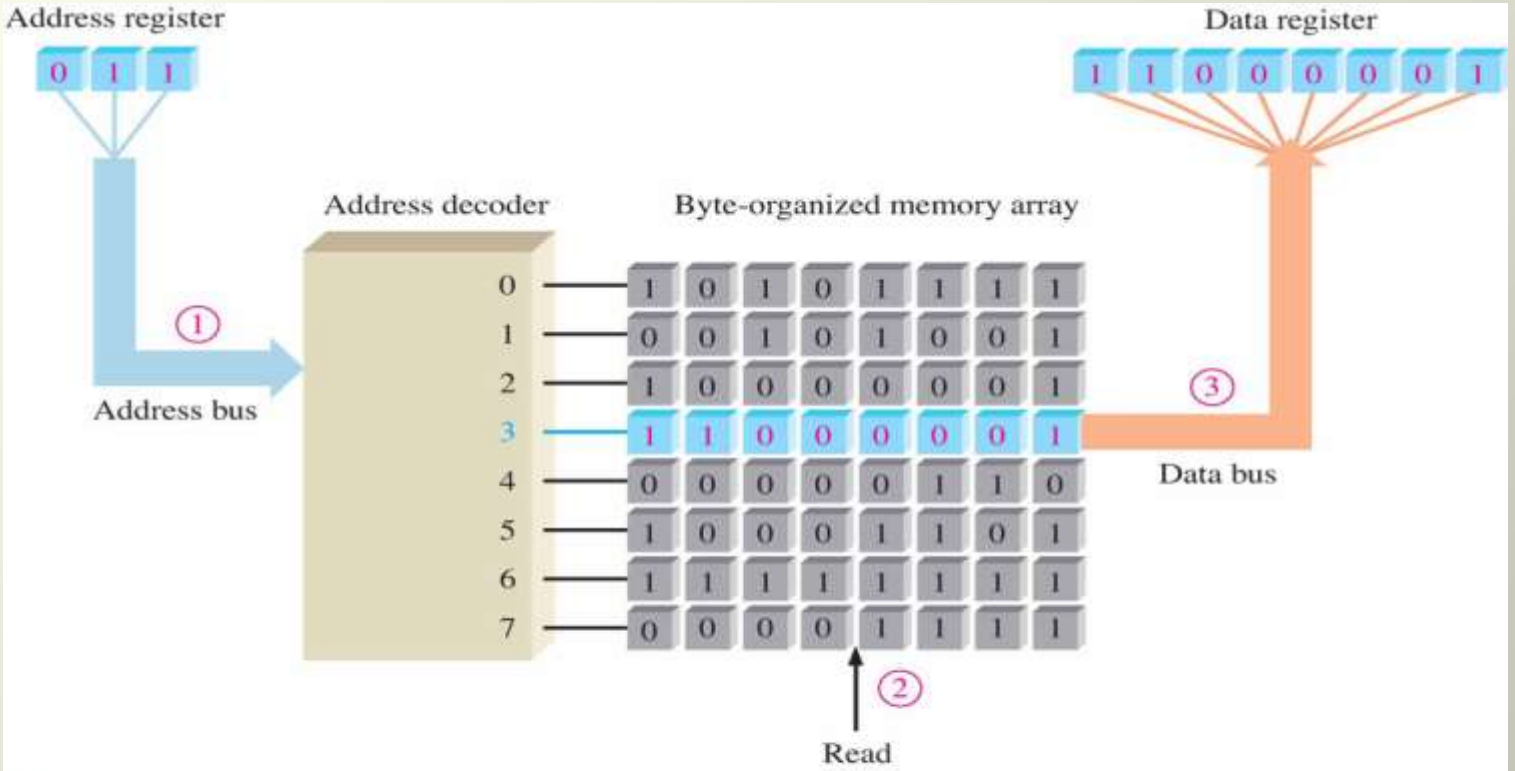

1. Address code 011 is placed on the address bus and address 3 is selected.
2. Read command is applied.
3. The contents of address 3 is placed on the data bus and shifted into data register. The contents of address 3 is not erased by the read operation.

2. The Random-Access Memory (RAM)

RAMs and ROMs

The two major categories of semiconductor memories are the RAM and the ROM. RAM (random-access memory) is a type of memory in which all addresses are accessible in an equal amount of time and can be selected in any order for a read or write operation. Because RAMs lose stored data when the power is turned off, they are *Volatile* (سريعة الزوال) memories

ROM (read-only memory) is a type of memory in which data are stored permanently or semi permanently. Data can be read from a ROM, but there is no write operation as in RAM. The ROM, like the RAM, is a random-access *read/write* memory. Because ROMs retain تحفظ المعلومات stored data even if power is turned off, they are *nonvolatile* memories.

The RAM family.

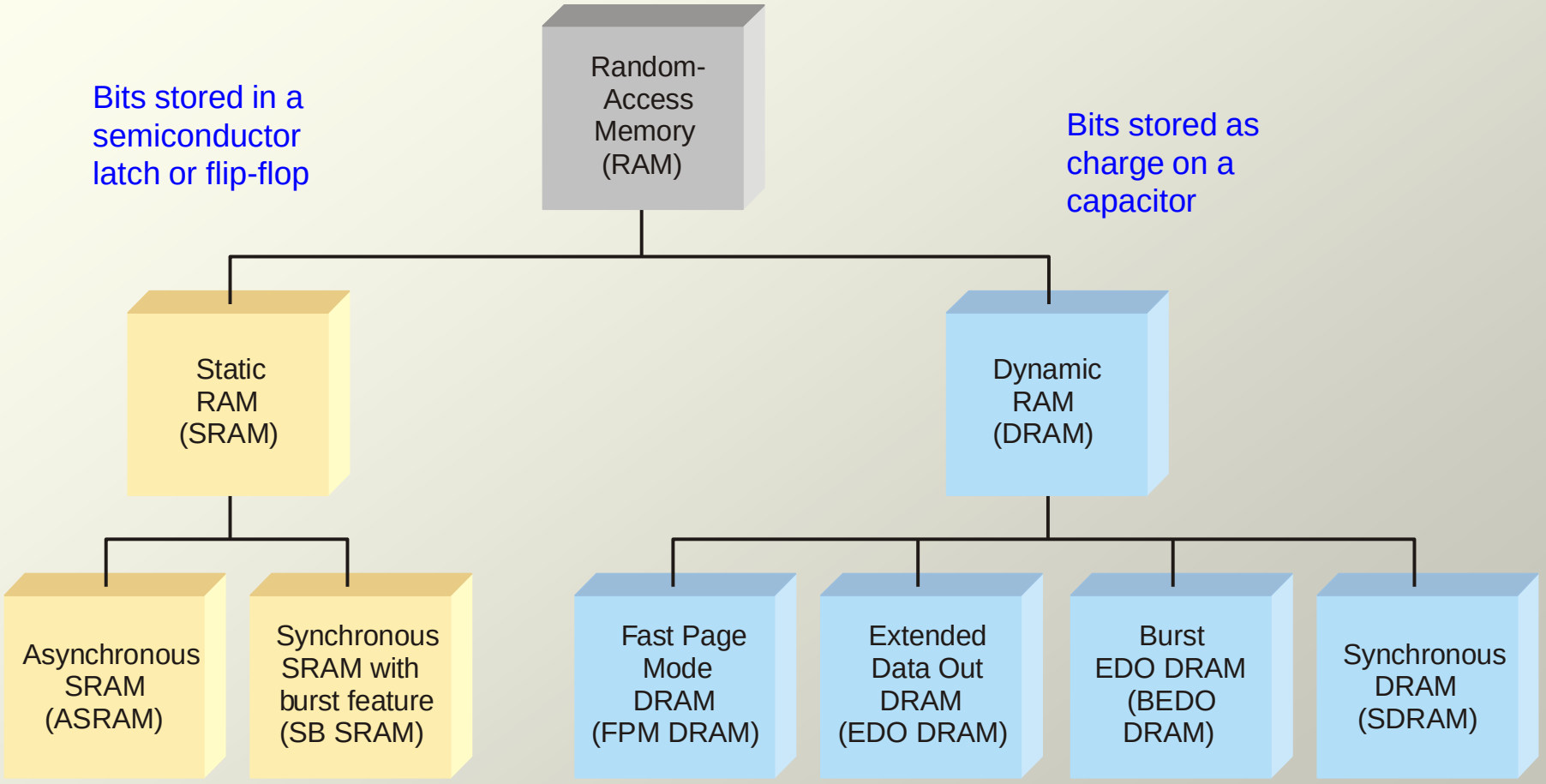

Static RAMs

1-Static RAMs use flip-flops as storage elements and can therefore store data indefinitely as long as dc power is applied.

2- Lose stored data when dc power is removed.

3- Data can be read faster than DRAMS.

4- SRAMs can store data less than DRAMs.

5- The basic types of SRAM are the asynchronous SRAM and the synchronous burst SRAM.

Dynamic RAMs

1-Dynamic RAMs use capacitors as storage elements and cannot retain data very long without the capacitors being charged by a process called refreshing

2- Lose stored data when dc power is removed.

3- Data can be read much slower then SRAMs

4- DRAMs can store data much more than SRAMs.

5- The basic types of DRAM are the Fast Page Mode DRAM (FPM DRAM), the Extended Data Out DRAM (EDO DRAM), the burst EDO DRAM (BEDO DRAM) and the synchronous DRAM (SDRAM).

SRAM uses semiconductor latch memory cells. The cells are organized into an array of rows and columns.

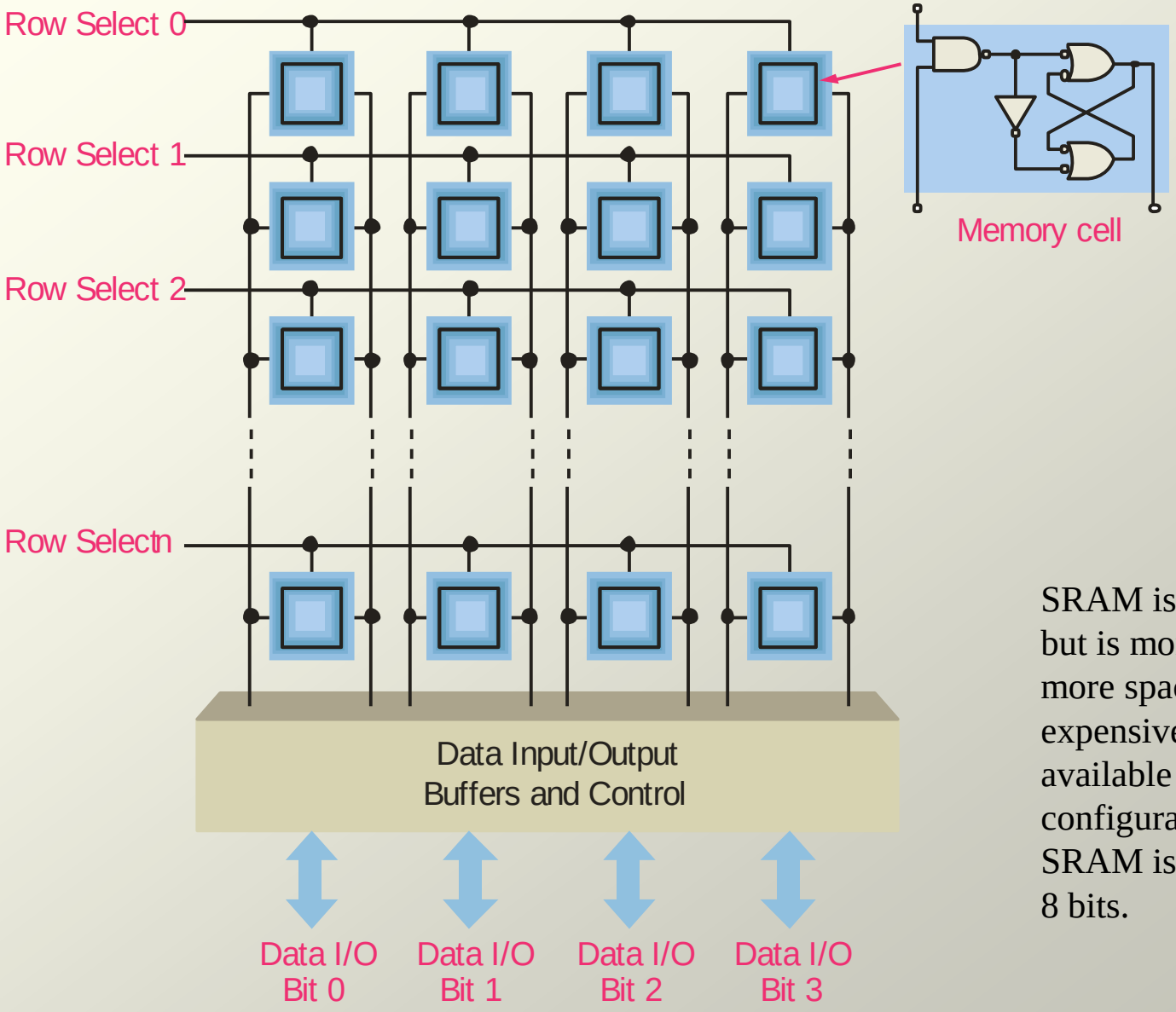

SRAM is faster than DRAM but is more complex, takes up more space, and is more expensive. SRAMs are available in many configurations – a typical large SRAM is organized as 512 k X 8 bits.

3. The Read-Only Memory (ROM)

The ROM family is all considered non-volatile, because it retains data with power removed. It includes various members that can be either permanent memory or erasable.

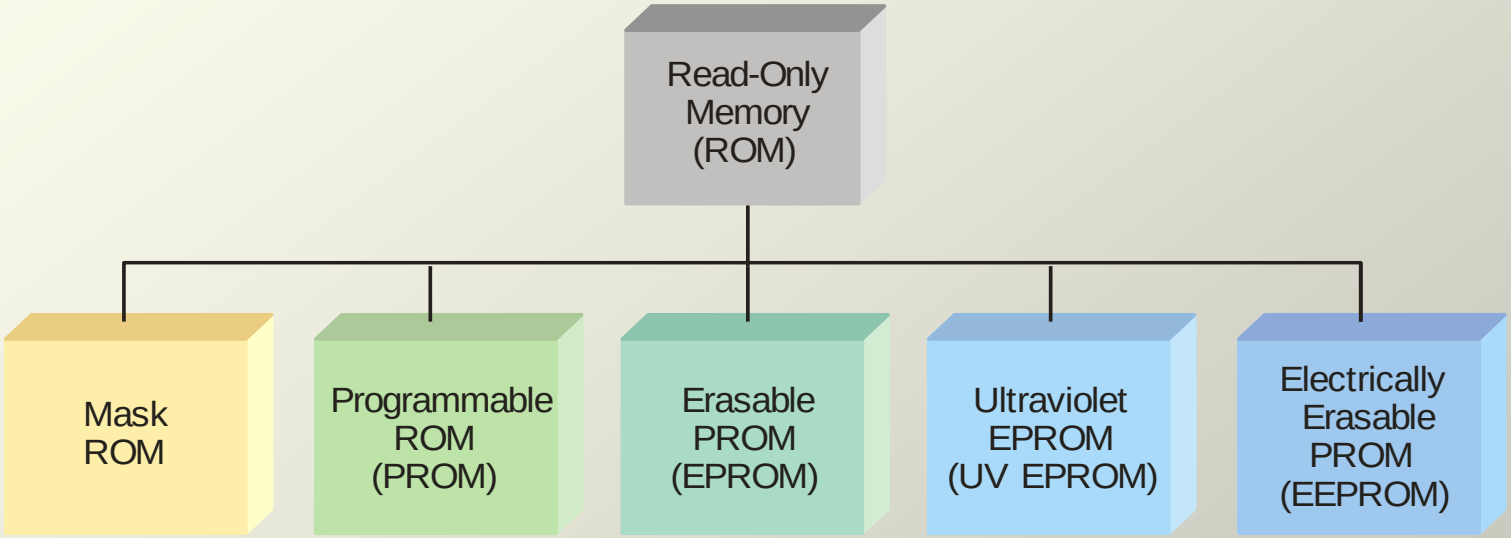

ROMs are used to store data that is never (or rarely) changed such as system initialization files. ROMs are *non-volatile*, meaning they retain the data when power is removed, although some ROMs can be reprogrammed using specialized equipment.

•Mask ROM :- it is permanently programmed during the manufacturing process to provide widely used standard functions.

•PROMs :- this type of memory comes from the manufacturer unprogammed and are custom programmed in the field to meet the user's need.

•EPROMs :- Is an erasable PROM. Unlike an ordinary PROM, an EPROM can be reprogrammed if an existing program in the memory array is erased first.

•UV EPROMs :- you can recognize the UV EPROM device by the transparent quartz lid on the package.

•EEPROMs :- an electrically erasable PROM can be both erased and programmed with electrical pulse. Since it can be both electrically written into and electrically erased, the EEPROM can be rapidly programmed and erased in-circuit for reprogramming.

4. Programmable ROMs

PROMs, EPROMs and EEPROMs

PROMs are programmable ROM, in which a fused link is burned open during the programming process. Once the PROM is programmed, it cannot be reversed.

An EPROM is an erasable PROM and can be erased by exposure to UV light through a window. To program it, a high voltage is applied to V_{PP} and $\overline{OE}$ is brought LOW.

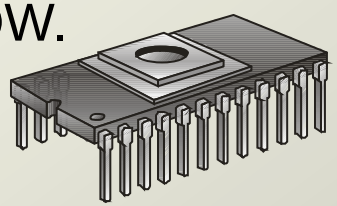

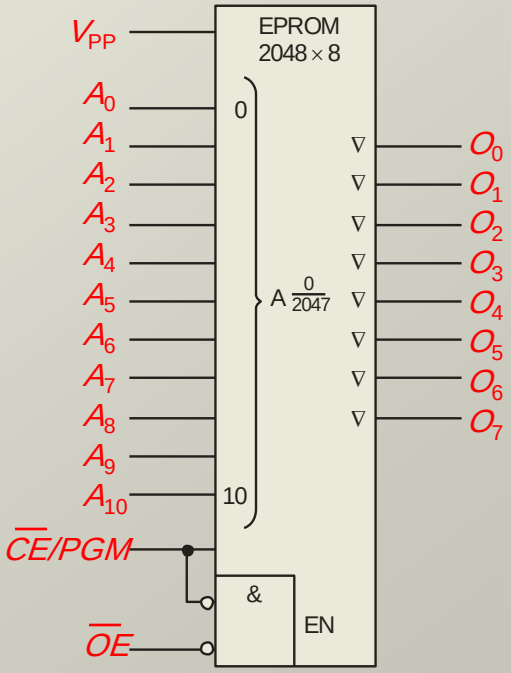

Another type of erasable PROM is the EEPROM, which can be erased and programmed with electrical pulses.

5. The Flash Memory

Flash memories are high density read/write memories that are nonvolatile. They have the ability to retain charge for years with no applied power.

Flash memory uses a MOS transistor with a floating gate as the basic storage cell. The floating gate can store charge (logic 0) when a positive voltage is applied to the control gate. With little or no charge, the cell stores a logic 1.

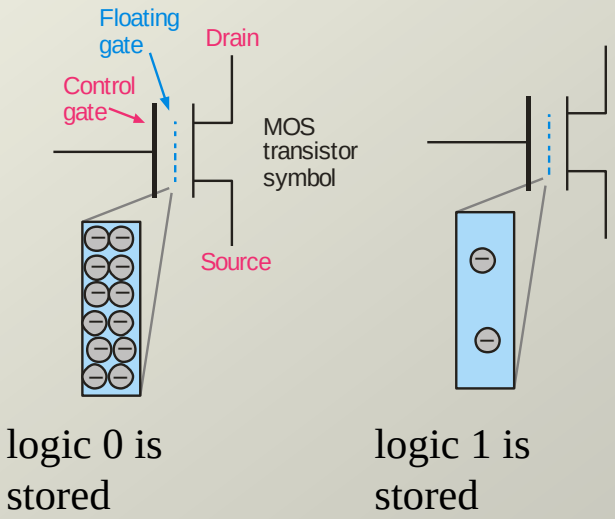

The flash memory cell can be read by applying a positive voltage to the control gate. If the cell is storing a 1, the positive voltage is sufficient to turn on the transistor; if it is storing a 0, the transistor is off.

6. Memory Expansion

Memory can be expanded in either word size or word capacity or both.

To expand word size:

Notice that the data bus size is larger, but the number of address is the same.

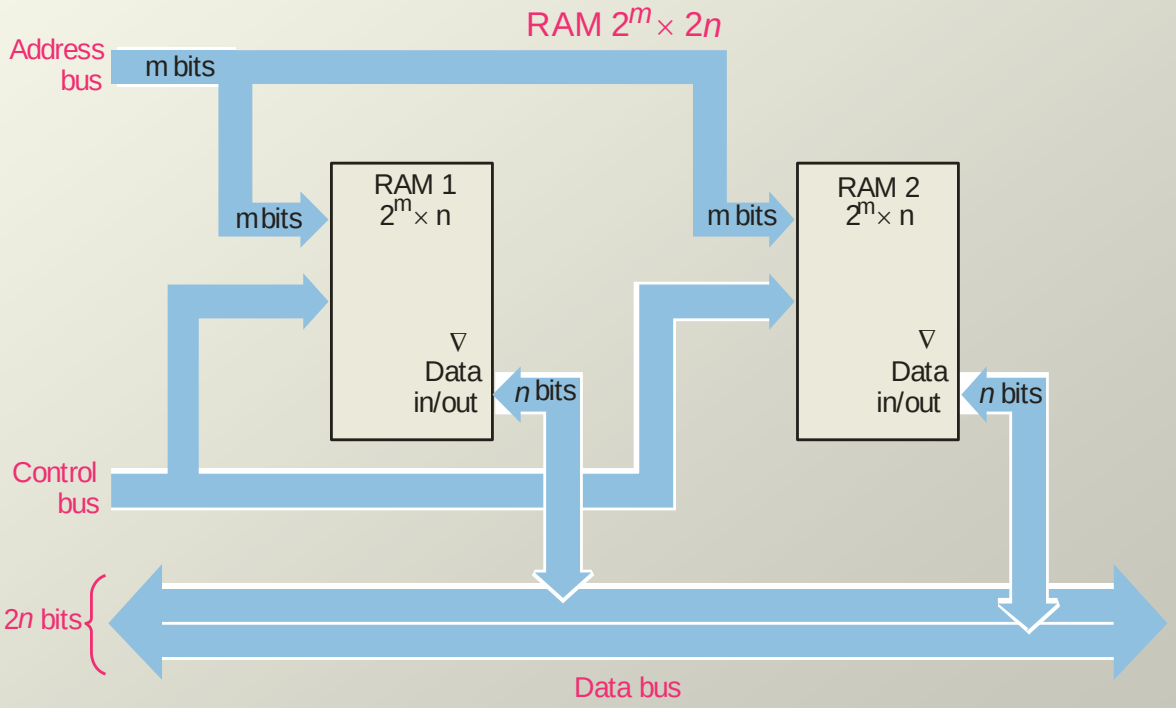

To expand word capacity, you need to add an address line as shown in this example

Notice that the data bus size does not change.

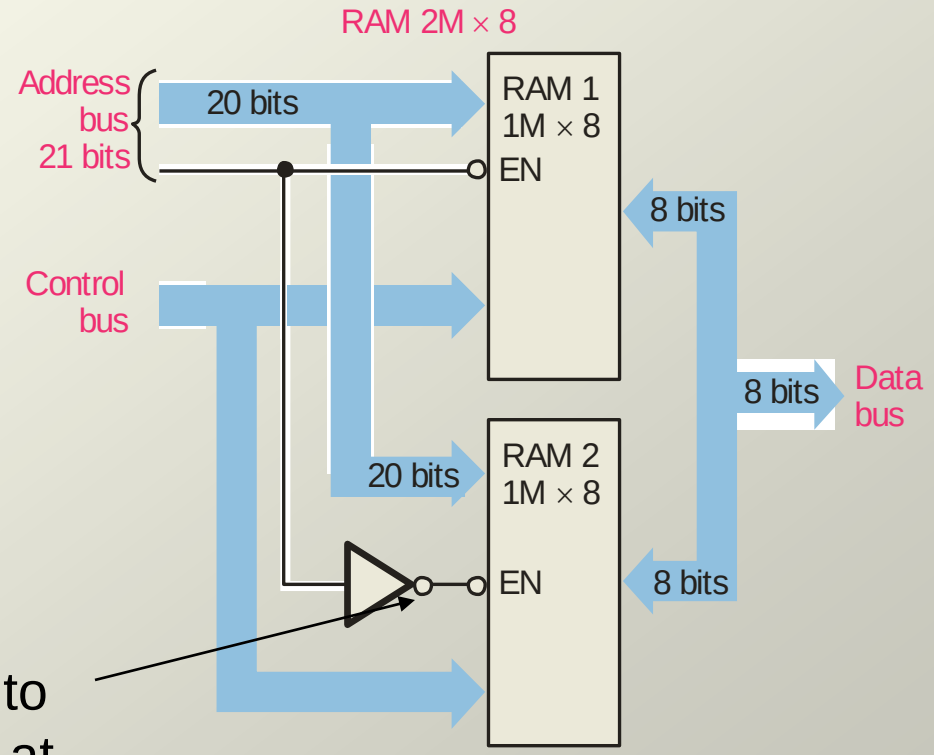

the purpose of the inverter is to make one of the ICs enabled at any time depending on the logic on the added address line.

SIMMs and DIMMs

SIMMs (single in-line memory modules) and DIMMs (dual in-line memory modules) are plug-in circuit boards containing the ICs and I/O brought out on edge connectors. SIMMs have a 32-bit data path with I/O on only one side whereas DIMMs have a 64-bit data path with I/O on both sides of the board.

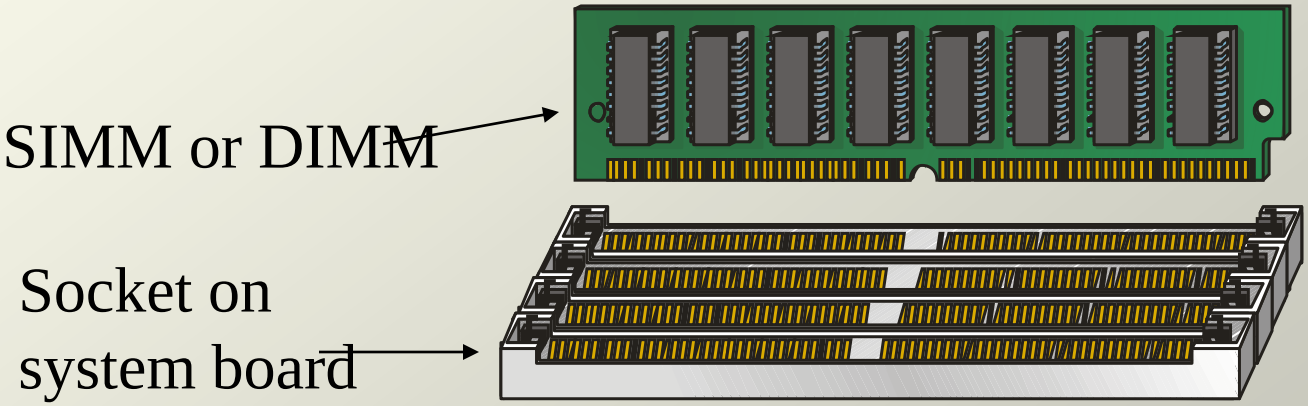

7. Special Types of Memories

FIFO Memory

FIFO means first in-first out. This type of memory is basically an arrangement of shift registers. It is used in applications where two systems communicate at different rates.

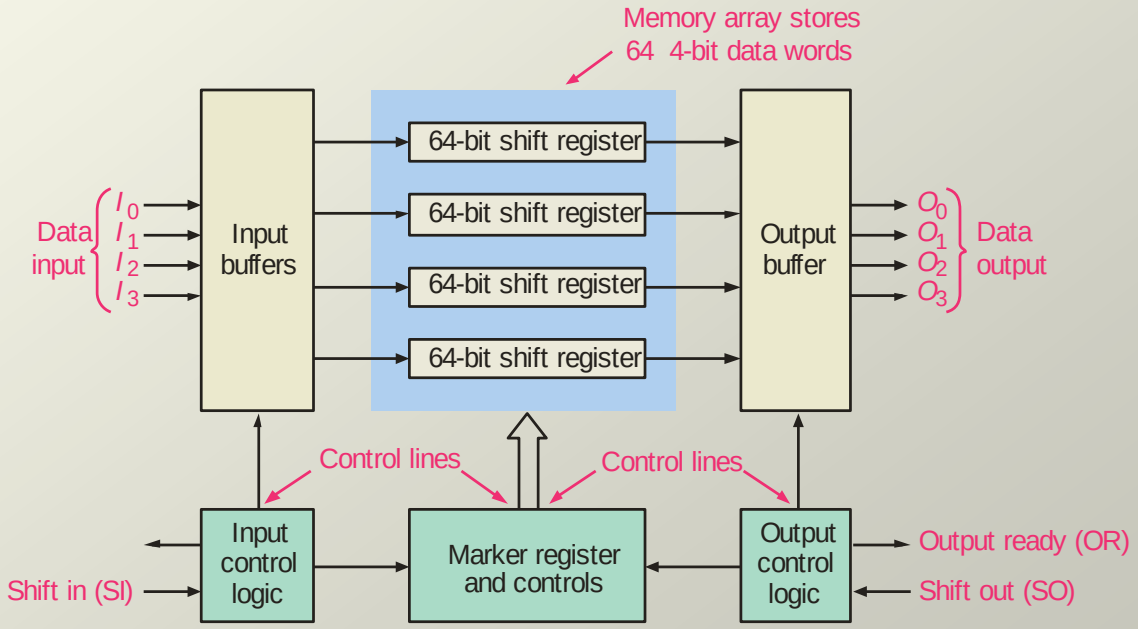

LIFO Memory

LIFO means last in-first out. In microprocessors, a portion of RAM is devoted to this type of memory, which is called the **stack**. Stacks are very useful for temporary storage of internal registers, so that the processor can be interrupted but can easily return to a given task.

A special register, called the stack pointer, keeps track of the location that data was last stored on the stack. This will be the next data to be taken from the stack when needed.

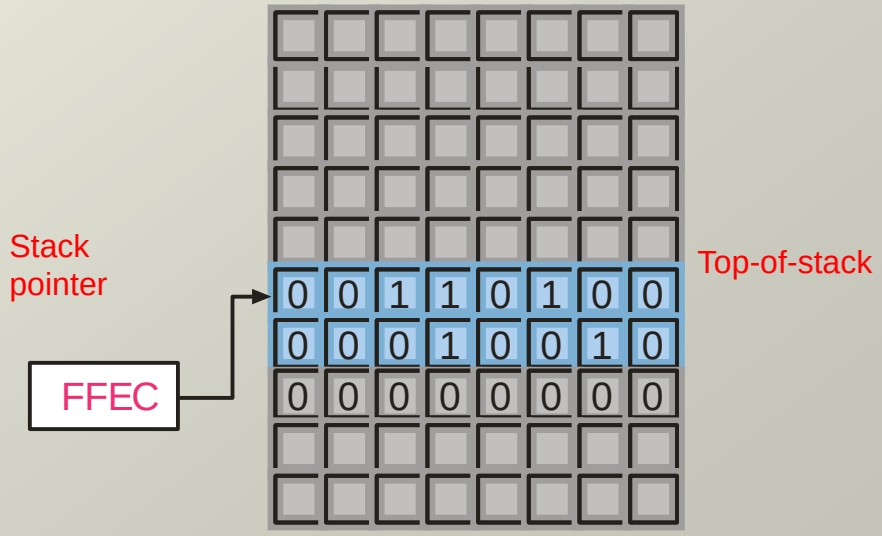

8. Magnetic and Optical Storage

Magnetic Hard Drive

The magnetic hard drive is the backbone of computer mass storage and is applied to other devices such as digital video recorders. Capacities of hard drives have increased exponentially, with 1 TB (1 trillion bytes!) drives available today.

Platters are arranged in tracks (circular shapes) and sectors (pie shaped). Files are listed in a File Allocation Table, (FAT) that keeps track of file names, locations, size, and more.

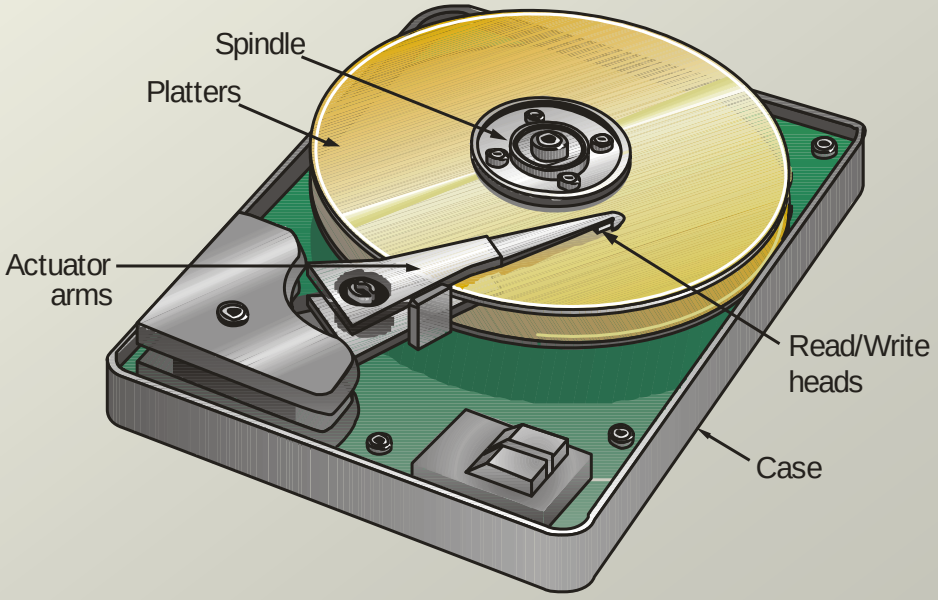

Hard drive with cover removed

Magnetic Floppy Disk

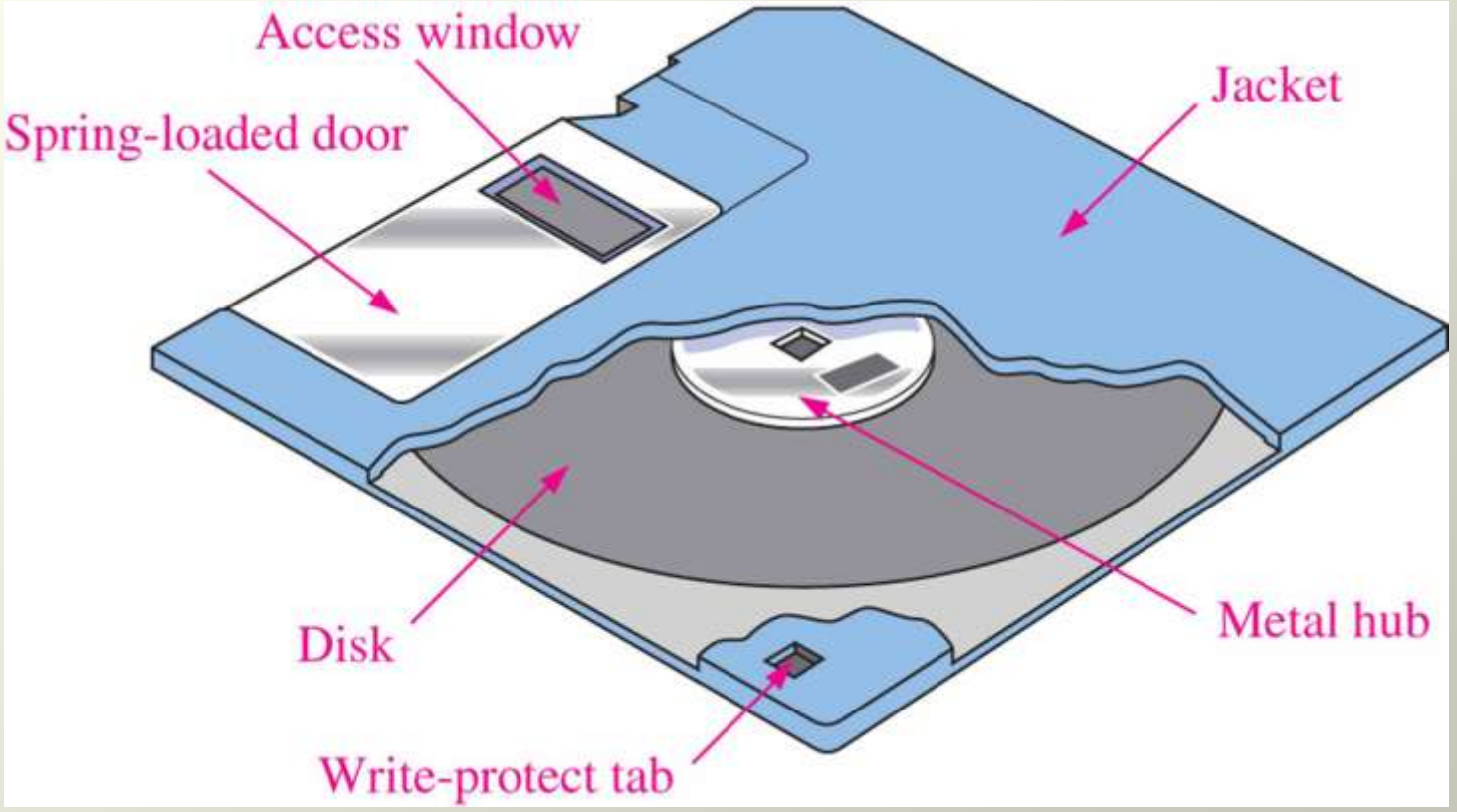

Optical Storage

The compact disk (CD) uses a laser to burn tiny *pits* into the media. Surrounding the pits are flat areas called *lands*. The CD can be read using a low-power IR laser that detects the difference between pits and lands.

Binary data is encoded with a special method called negative non-return to zero encoding. A change from a pit to a land or a land to a pit represents a binary one, whereas no change represents a zero. A standard 120 mm CD can hold approximately 700 MB of data.

Key Terms

Memory : The location of a given storage cell or group of cells in memory.

Capacity: The total number of data units (bits, nibbles, bytes, words) that a memory can store.

SRAM: Static random access memory; a type of volatile read/write semiconductor memory.

DRAM: Dynamic random access memory; a type of read/write memory that uses capacitors as the storage elements and is a volatile read/write memory.

PROM: Programmable read-only memory; type of semiconductor memory.

EPROM: Erasable programmable read-only memory; a type of semiconductor memory device that typically uses ultraviolet light to erase data

Flash Memory: A nonvolatile read/write random access semiconductor memory in which data are stored as charge on a floating gate of a certain type of FET.

FIFO: First in-first out memory.

LIFO: Last in-first out memory

Hard Disk: A magnetic storage device; typically a stack of two or more rigid disks enclosed in a sealed housing.

Compact Disk (CD): uses a laser to burn tiny *pits* into the media

- **Byte, Word, Cell, Address, Capacity, Write, Read, RAM, ROM**