Semester II (2018-2019)

Chapter Two
Tension Members

Tension members are members subjected to direct axial tension force, like:

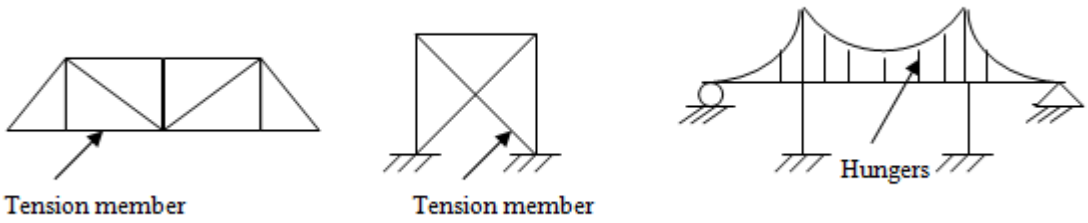

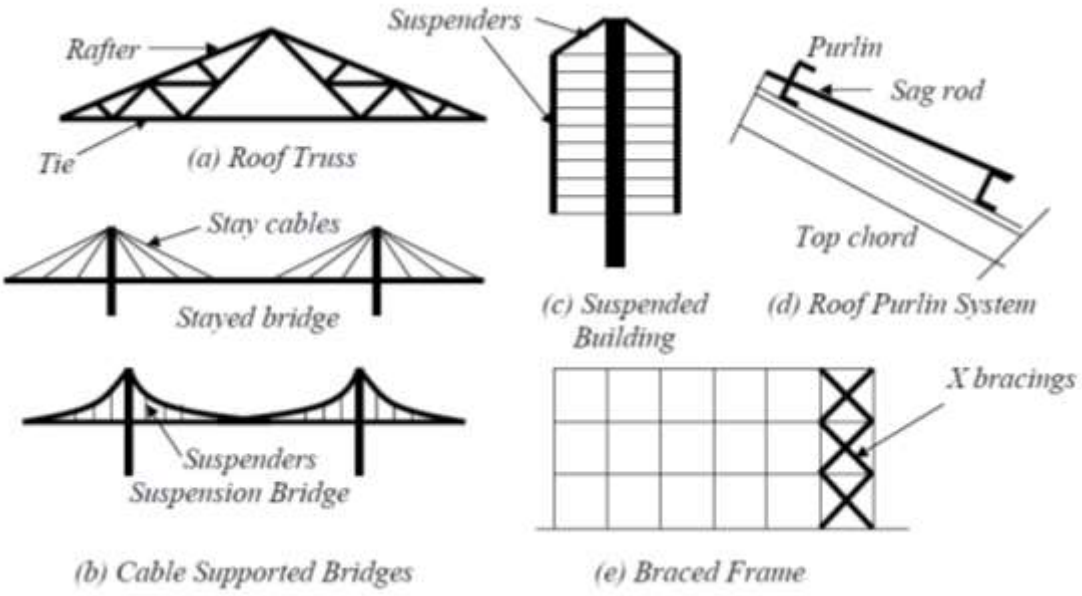

See parts of AISC – M – LRFD / page (5 – 1) and Ch. D – Specifications p. (16.1-282).

(1) Types of Tension Members:

1 - cable is a flexible tension member consisting of one or more groups of wires.

2 – Rods and Bars
used in bracing system, as in towers, sag rods for purlins in sloping roofs.

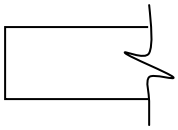

upset end

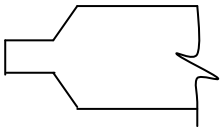

threaded end

3 – Eye bars and pin – connected plates:
see page AISC – LRFD page D/(5 – 30)
4 – Structural shapes:

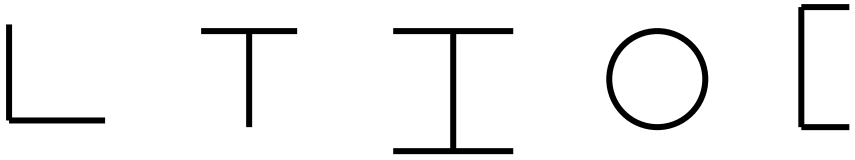

5 – Built – up members
they are combination of two or more shapes, like:

double angle

double channel

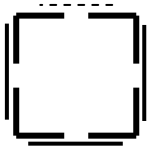

built – up plate and angle shape

(2) Net Area:

It refers to the gross cross – sectional area of a member minus any holes

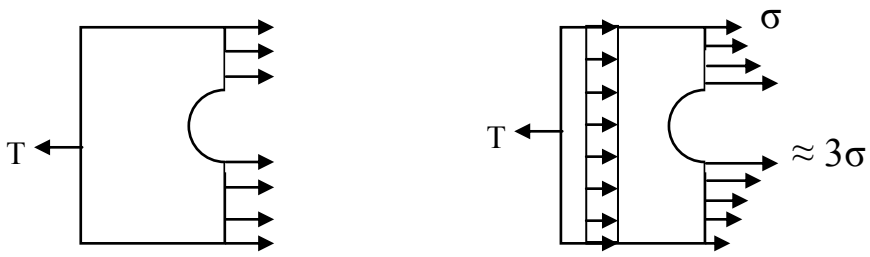

Theoretical Actual

(3) Determining of Net Areas:

- For rivet and bolted connections:

Area– 1 for one row (line) holes
Net area An = t (b – d)

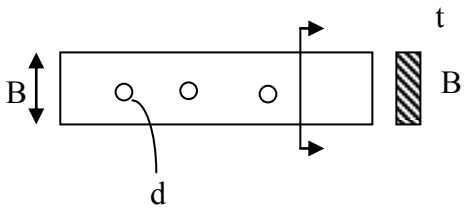

Area – 2 for two row or more than one row:
An = t (B – 2d)

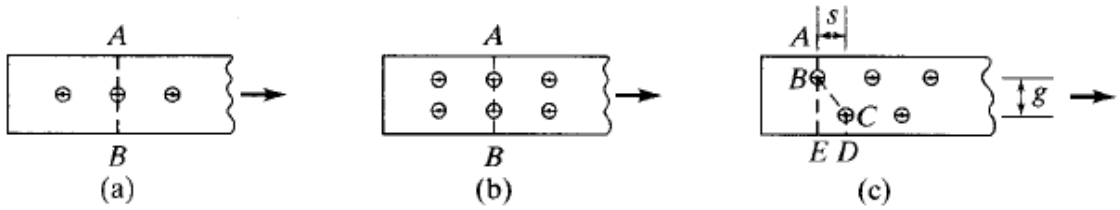

In general:
An = t (B – nd) n: number of bolts

A – 3 Staggered Distribution:
Section ABE = An_1 = t (B – d)

ABCD

Sect. ABCD $An_2 = t\left(B - 2d + \frac{S^2}{4g}\right)$

S (stagger) = spacing of adjacent holes parallel to load direction
g (gage) = the gage distance transverse to load direction

The smaller of An_1 , An_2 represents the critical net area
In general:

$An = t\left(B - \sum d + n\,\frac{S^2}{4g}\right)$

Where: n = no. of staggered (zigzag) lines

Note: $d = \Phi + 1/8$ (because of fabricating)

TABLE 3.1 Workable Gages for Angles, in Inches

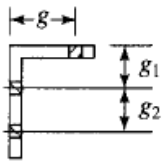

Leg	8	7	6	5	4	$3\frac{1}{2}$	3	$2\frac{1}{2}$	2	$1\frac{3}{4}$	$1\frac{1}{2}$	$1\frac{3}{8}$	$1\frac{1}{4}$	1
g	$4\frac{1}{2}$	4	$3\frac{1}{2}$	3	$2\frac{1}{2}$	2	$1\frac{3}{4}$	$1\frac{3}{8}$	$1\frac{1}{8}$	1	$\frac{7}{8}$	$\frac{7}{8}$	$\frac{3}{4}$	$\frac{5}{8}$
g_1	3	$2\frac{1}{2}$	$2\frac{1}{4}$	2										
g_2	3	3	$2\frac{1}{2}$	$1\frac{3}{4}$										

B – For Relatively Short Fitting (splice and gusset plates)

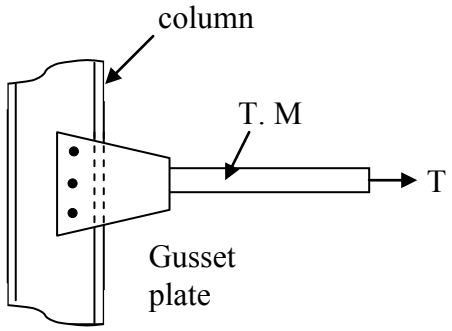

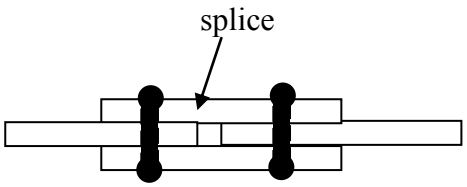

$An \leq 0.85\ Ag$ AISC – LRFD (Ch. J – Specifications)

Example1: Determine the critical net area for the 1/2 in thick plate shown in fig. below. The holes are punched for 3/4 in bolts.

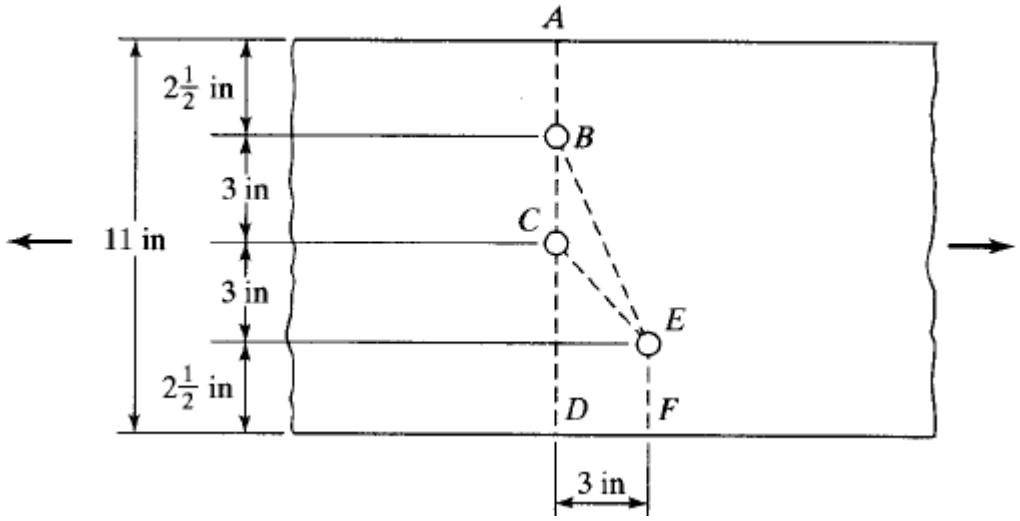

Solution:

$$An = t\,(B - \sum d + n\,\frac{S^2}{4g})$$

$$An\ ABCD = 0.5\,(11 - 2\,(\frac{1}{8}+\frac{3}{4})) = 4.625\ in^2$$

$$An\ ABCEF = 0.5\,(11 - 3\,(\frac{7}{8}) + \frac{(3)^2}{4*3}) = \underline{4.56}\ in^2\ \underline{control}$$

$$An\ ABEF = 0.5\,(11 - 2\,(\frac{7}{8}) + \frac{(3)^2}{4*6}) = 4.813\ in^2$$

(4) Effective Net Area (Ae) see parts D ASCE M - LRFD

- When a member other than a flat plate or bar is loaded in axial tension until failure occurs across its net section , its' actual tensile stress will be less than the tensile strength of the steel, unless all of various elements which make up the section are connected so stress is transferred uniformly across the section. The reason of the reduced strength of the member is the concentration of shear stress, called *shear lag*

$Ae = U\,An \qquad U \leq 1$

$$U = 1 - \frac{\bar{x}}{L} \quad \leq \quad 0.9$$

$\bar{x}$ = distance from the centroid of the connected area to the plane of connection.

L = length of the connection in the direction of load

Generally:

If the force is transmitted directly to each of the cross sectional elements of a member by connectors : Ae = An

- Bolted or Riveted Members:

If the load is transmitted by bolts or rivets through some but not all of the elements of the member, value of Ae is:

Ae = U An

Semester II (2018-2019)

7

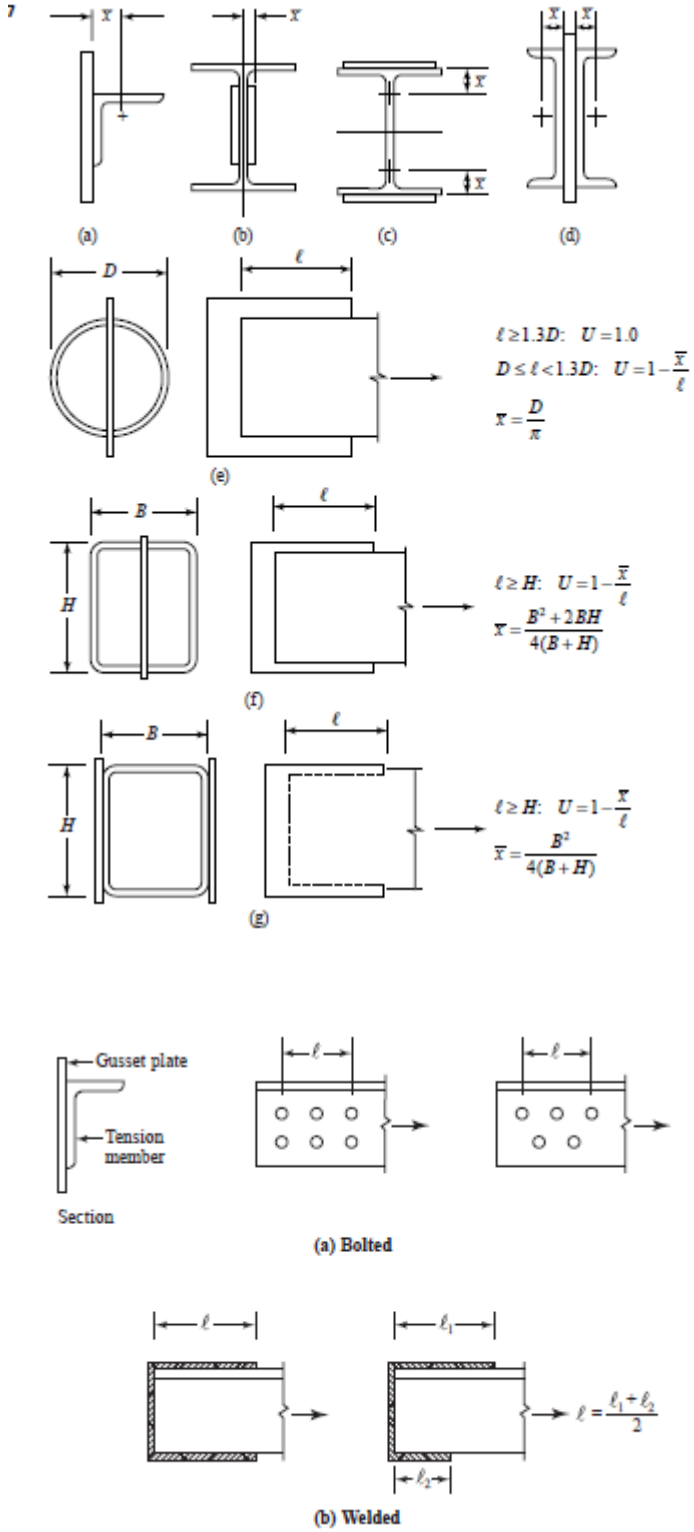

- Plates:

In general, $U = 1.0$ for plates, since the cross section has only one element and it is connected. There is one exception for welded plates, however. If the member is connected with longitudinal welds on each side with no transverse weld (as in Figure 3.9), the following values apply:

- For $\ell \geq 2w$ $U = 1.0$
- For $1.5w \leq \ell < 2w$, $U = 0.87$
- For $w \leq \ell < 1.5w$, $U = 0.75$

3. Round HSS with $\ell \geq 1.3D$ (see Figure 3.7e):

$U = 1.0$

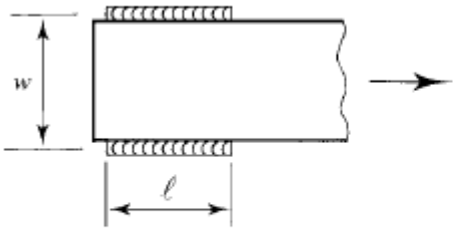

4. Alternatives to Equation 3.1 for Single and Double Angles:

The following values may be used in lieu of Equation 3.1.

- For four or more fasteners in the direction of loading, $U = 0.80$.
- For three fasteners in the direction of loading, $U = 0.60$.

5. Alternatives to Equation 3.1 for W, M, S, HP, or Tees Cut from These Shapes:

If the following conditions are satisfied, the corresponding values may be used in lieu of Equation 3.1.

- Connected through the flange with three or more fasteners in the direction of loading, with a width at least ⅔ of the depth: $U = 0.90$.
- Connected through the flange with three or more fasteners in the direction of loading, with a width less than ⅔ of the depth: $U = 0.85$.
- Connected through the web with four or more fasteners in the direction of loading: $U = 0.70$.

5. Alternatives to Equation 3.1 for W, M, S, HP, or Tees Cut from These Shapes:

If the following conditions are satisfied, the corresponding values may be used in lieu of Equation 3.1.

- Connected through the flange with three or more fasteners in the direction of loading, with a width at least ⅔ of the depth: $U = 0.90$.
- Connected through the flange with three or more fasteners in the direction of loading, with a width less than ⅔ of the depth: $U = 0.85$.
- Connected through the web with four or more fasteners in the direction of loading: $U = 0.70$.

Figure 3.10 illustrates the alternative values of U for various connections.

If a tension member is connected with only transverse welds, $U = 1.0$, and A_n is the area of the connected element. Figure 3.11 illustrates the difference between transverse and longtitudinal welds. Connections by transverse welds alone are not common.

There are some limiting values for the effective area:

- For bolted *splice plates*, $A_e = A_n \leq 0.85A_g$. This limit is given in a user note and is from a requirement in Chapter J of the Specification "Design of Connections."
- For open cross-sectional shapes (such as W, M, S, C, HP, WT, and ST) and (angles), the value of U need not be less than the ratio of the connected element gross area to the total gross area.

The Design Philosophy for LRFD Method for Tension Members

Design Equation:

$$\sum \gamma_i Q_i \leq \phi R_n$$

where

Q_i	=	nominal load effect (service loads)
γ_i	=	load factor corresponding to Q_i (usually > 1.0)
$\Sigma\gamma_i Q_i$	=	total factored load effect (or required strength)
R_n	=	nominal resistance
ϕ	=	resistance factor corresponding to R_n (< 1.0)
ϕR_n	=	design strength

Requirements for Tension members:

The design strength is taken as the smaller of the following:

1 – Yielding failure of the cross section area

$$\phi_t P_n = \phi_t F_y A_g = 0.90 F_y A_g$$

2 – Fracture of the net section area

$$\phi_t P_n = \phi_t F_u A_e = 0.75 F_u A_e$$

3 - Slenderness ratio requirement (recommendation)

$L/r \leq 300$

4 - Block Shear Rapture

$$\phi R_n = \phi (0.6 F_y A_{gv} + F_u A_{nt}) \qquad \text{(AISC-LRFD J4-3a)}$$

$\Phi = 0.75$

Block shear is a combined tensile/shear tearing out of an entire section of a connection. Common examples are shown below:

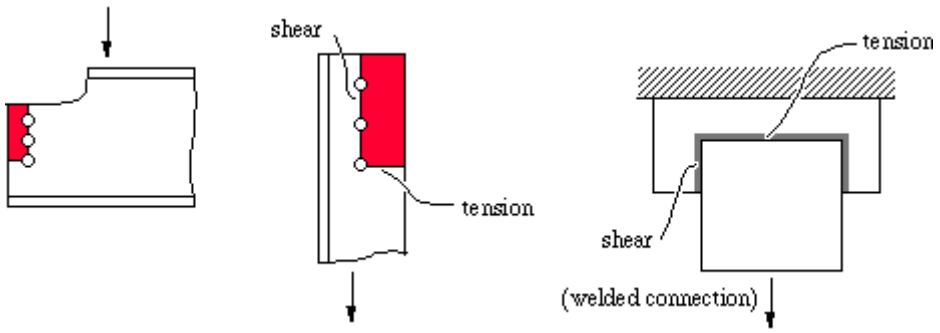

For such a failure to occur, there are two possible mechanisms: (1) Shear rupture + tensile yielding; and (2) Shear yielding + tensile rupturing.

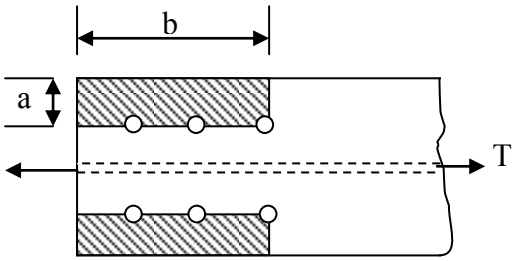

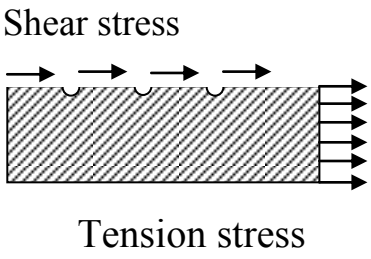

Agv = the net shear area
Ant= the net tension area

3 - Fatigue

Fatigue can be defined as the damage that may result in fracture after a sufficient number of fluctuations of stress.

Stress range is defined as the magnitude of these fluctuations.

The range of stress at service loads shall not exceed the stress range computed as follows.

(a) For stress categories A, B, B`, C, D, E and E` the design stress range, FSR, shall be determined by Equation A-K3.1 or A-K3.1M.

$$F_{SR} = \left(\frac{C_f}{N}\right)^{0.333} \geq F_{TH} \qquad \text{(A-K3.1)}$$

where

F_{SR} = Design stress range, ksi (MPa)
C_f = Constant from Table A-K3.1 for the category
N = Number of stress range fluctuations in design life
= Number of stress range fluctuations per day × 365 × years of design life
F_{TH} = Threshold fatigue stress range, maximum stress range for indefinite design life from Table A-K3.1, ksi (MPa)

Tutorial – Tension Members

Ex1: Determine the net area of the (3/8 *8 in) plate shown in the fig. below if the plate is connected at its end with two lines of (¾) in bolts.

Solution

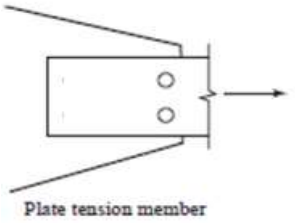
Plate tension member

Ag = (3/8) * 8 = 3 in.

An = t (B – nd) = (3/8) (8 – 2 *($\frac{3}{4}+\frac{1}{8}$)) = 2.43 in^2

Ex2: Determine the net areas for the angle (6 * 4 *1/2 in) if there are 6 holes of (5/16)" diameter as shown below.

Solution

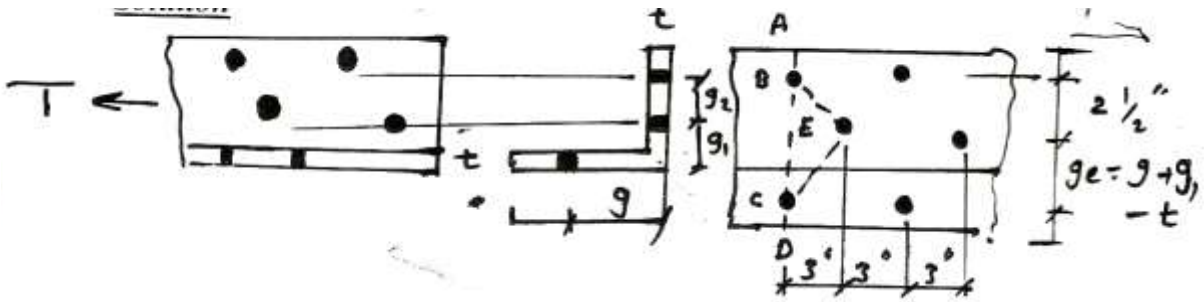

Dimension: see AISC

Sec	Ag	g	g1	g2
L 6*4*1/2	4.75	3 ½	2 ¼	2 1/2

ABCD : An = Ag – 2*(1/2) ($\frac{5}{16}+\frac{1}{16}$) = 4.375 in^2

ABECD : An = Ag – 3(1/2) ($\frac{5}{16}+\frac{1}{16}$) +[(1/2) ($\frac{(3)^2}{4*(2.5)}$) + (1/2) ($\frac{(3)^2}{4*(5.25)}$)] = 5.37 in^2

Then path ABCD critical $\therefore An = 4.375\ in^2$

Ex3: For the two lines of bolt holes shown in fig. determine the pitch which will give a net area DEFG equal to the one along ABC. The holes are punched for ¾ in bolts.

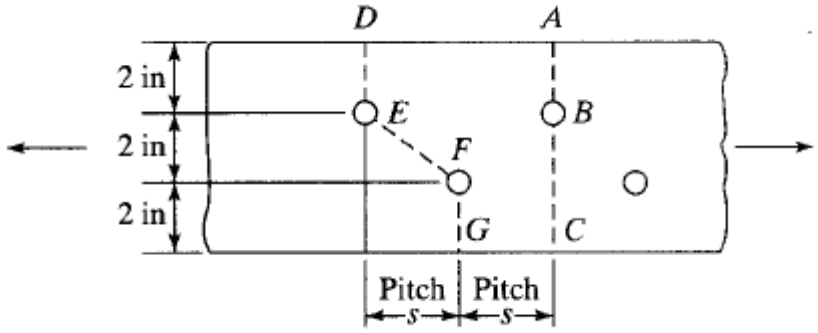

Solution

ABC : $An = 6 - (1)(7/8) = 5.125\ in^2$

DEFG: $An = 6 - (2)(7/8) + \frac{S^2}{4*2} = 4.25 + \frac{S^2}{8}$

ABC = DEFG then $5.125 = 4.25 + \frac{S^2}{8}$

S = 2.65 in.

Ex4: Determine the net area for the C15*33.9 shown in fig. below. Holes are for ¾ in bolts.

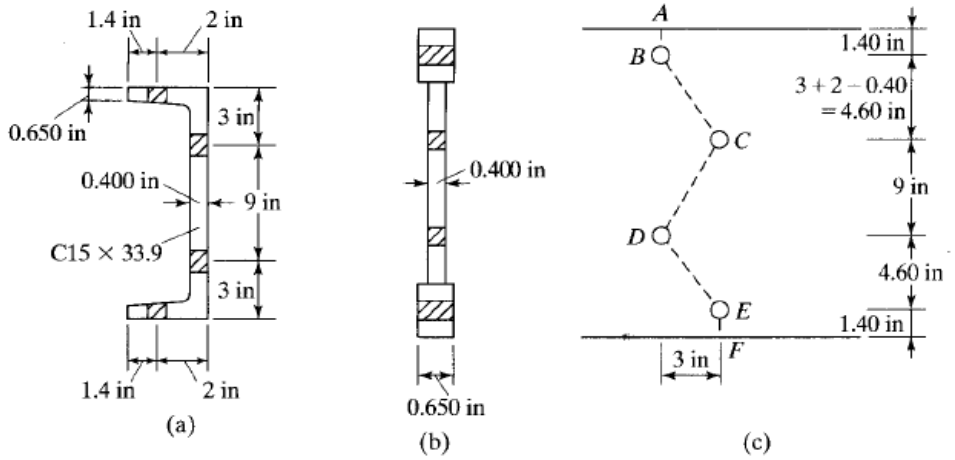

Solution:

Gross area = Ag $= 9.96\ in^2$

Path ABCD : $An = 9.96 - 0.65\ (\frac{3}{4}+\frac{1}{8}) - 0.4(\frac{3}{4}+\frac{1}{8}) = 9.04\ in^2$

Path ABECD :

$An = 9.96 - 0.65\ (\frac{3}{4}+\frac{1}{8}) - 2*0.4(\frac{3}{4}+\frac{1}{8}) + \frac{3^2}{4*9}(0.4) + \frac{3^2}{4*4.6}(\frac{0.65+0.4)}{2} =$

$9.048\ in^2$

Path ABCFG: $An = 9.96 - 2\ (0.65*(7/8)) - 0.4*\ (7/8) + \frac{3^2}{4*4.6}(\frac{0.65+0.4)}{2}$

$= 8.7293\ in^2$ **critical** (Why?)

Path ABECFG:

$An = 9.96 - 2*(7/8)(0.65) - 2*(7/8)(0.4) +$

$(\frac{3^2}{4*9}(0.4) + (2)\frac{3^2}{4*4.6}(\frac{0.65+0.4)}{2}$

$= 8.736\ in^2$

Ex5: Determine the max. length required by AISC for a tension member where cross – section is Plate of 7*1 ½ in.

Solution:

Check least r = rx

$rx = \sqrt{Ix/A}\ \ , Ix = \frac{bt^3}{12} = \frac{7*(1.5)^3}{12} = 1.97\ in^4$

$rx = \sqrt{1.97/10.5} = 0.433 in^2\ , A = 10.5\ in^2$

$L/r\,min \le 300, L = 0.433*300,\quad$ then $L = 130\,in$

Ex6: Find the available strength of the S-shape shown in Figure. The holes are for 3⁄4-inch-diameter bolts. Use A36 steel.

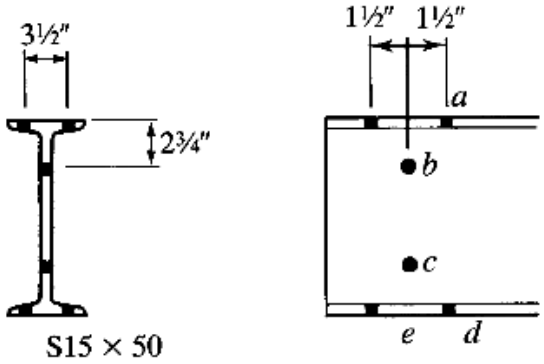

Solution:

Compute the net area:

$$A_n = A_g - \sum t \times (d \text{ or } d')$$

$$\text{Effective hole diameter} = \frac{3}{4} + \frac{1}{8} = \frac{7}{8}$$

For line *ad*,

$$A_n = 14.7 - 4\left(\frac{7}{8}\right)(0.622) = 12.52 \text{ in.}^2$$

For line *abcd*, the gage distance for use in the $s^2/4g$ term is

$$\frac{g}{2} + g_1 - \frac{t_w}{2} = \frac{3.5}{2} + 2.75 - \frac{0.550}{2} = 4.225 \text{ in.}$$

Starting at *a* and treating the holes at *b* and *d* as the staggered holes gives

$$A_n = A_g - \sum t \times (d \text{ or } d')$$

$$= 14.7 - 2(0.622)\left(\frac{7}{8}\right) - (0.550)\left[\frac{7}{8} - \frac{(1.5)^2}{4(4.225)}\right]$$

$$-(0.550)\left(\frac{7}{8}\right) - 2(0.622)\left[\frac{7}{8} - \frac{(1.5)^2}{4(4.225)}\right] = 11.73 \text{ in.}^2$$

Line *abcd* controls. As all elements of the cross section are connected,

$$A_e = A_n = 11.73 \text{ in.}^2$$

For the net section, the nominal strength is

$$P_n = F_u A_e = 58(11.73) = 680.3 \text{ kips}$$

For the gross section,

$$P_n = F_y A_g = 36(14.7) = 529.2 \text{ kips}$$

The design strength based on fracture is

$$\phi_t P_n = 0.75(680.3) = 510 \text{ kips}$$

The design strength based on yielding is

$$\phi_t P_n = 0.90(529.2) = 476 \text{ kips}$$

Yielding of the gross section controls.

Ex7: Select an 8 in. W-shape, ASTM A992, to carry a dead load of 30 kips and a live load of 90 kips in tension. The member is 25 ft long. Verify the member strength by LRFD with the bolted end connection shown. Verify that the member satisfies the recommended slenderness limit

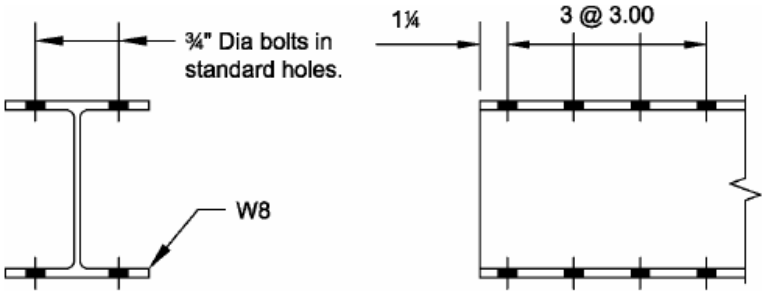

Solution:

Pu = 1.2 (30) + 1.6 (90) = 180 kips

ΦPn = Pu , ΦPn = 0.9 Fy Ag , 0.9 Fy Ag = Pu

Min Ag = 180/ (0.9*50) = 4 in^2

Min Ag = (Pu/0.75FuU)+ estimated hole areas

(Assume U = 0.9 and thickness of flange about 0.315 after loking at W8 sections which have an area of about 4 in^2)

Min Ag = (180/0.75*65*0.9) + 4 *0.315 *(3/4+1/8) =5.2 in^2

Try W8*21 (Ag = 6.16 in2, bf = 5.27 in. tf = 0.400 in. d = 8.28 in., ry = 1.26 in.)

Pu = ΦFy Ag = 0.9 *50 * 6.16 = 277.9 kips > 180 O.K.

Pu = Φ Fu Ae , An = 6.16 – 4 * (3/4 +1/8) * 0.4 = 4.76 in^2

U = ? bf/ d = 5.27/ 8.28 = 0.636 < (2/3= 0.666) then U = 0.85

Ae = 0.85 *4.76 = 4.046 in^2 ,

Pu = 0.75*65*4.046 = 197.2 kips > 180 O.K.

L/rmin = 25*12 / 1.26 = 238 < 300 O.K.

Then use W8*21

Ex8: Check the adequacy of an L4×4×½, ASTM A36, with one line of (4) ¾ in. diameter bolts in standard holes. The member carries a dead load of 20 kips and a live load of 50 kips in tension. Calculate at what length this tension member would cease to satisfy the recommended slenderness limit.

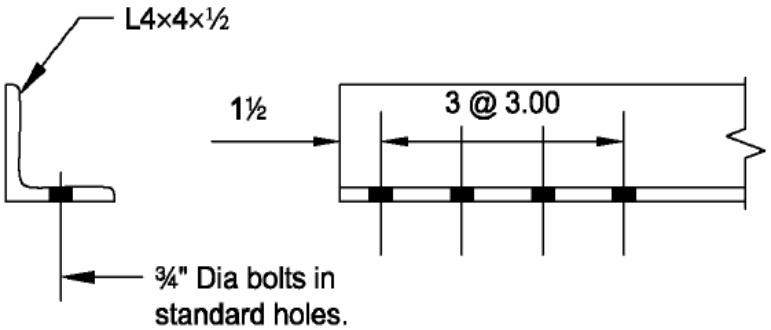

Solution:

Fy = 36 ksi Fu = 58 ksi

L4×4×½ , Ag = 3.75 in^2 , rz = 0.776 in.

Pu = 1.2(20 kips) + 1.6(60 kips) = 104 kips

ΦPn = 0.9 *36* 3.75 = 122 kips > 104 kip O.K.

Ae = UAn

An = 3.75 – (3/4+1/8) *0.5 = 3.31 in^2

U = 0.8 case 8

Ae= 0.8*3.31 = 2.648 ,

ΦPn = 0.75 FuAe
ΦPn = 0.75 *58 * 2.648 = 115.2 kips > 104 kips O.K

L/rmin ≤ 300 then L = 300* 0.776 = 232.8 in = 19.4 ft

Then the length of this member must not be greater than 19.4 ft

Ex9: See Figure below. A 5/8" in. thick eye bar member, ASTM A36, carries a dead load of 25 kips and a live load of 15 kips in tension. The pin diameter d is 3 in. Verify the strength by LRFD .

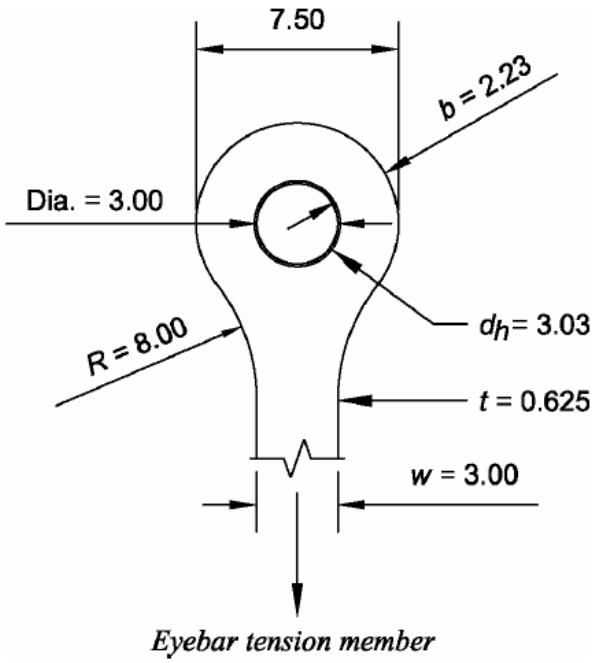

Solution

Plate ASTM A36 Fy = 36 ksi Fu = 58 ksi

Geometric Properties: Section D4.2
w = 3 in. b = 2.23 in. t = 0.625 in.
db = 3 in. dh = 3.03 in. R = 8.00 in.

Check dimensional requirements

1) t > ½ in.	0.625 in. > 0.500 in. o.k.
2) w < 8t	3.00 in. < 8(0.625 in.) = 5 in. o.k.
3) d > 7/8w	3.00 in. > 7/8 (3.00 in.) = 2.63 in. o.k.
4) dh < d + 1/32 in.	3.03 in. < 3.00 in. + (1/32 in.) = 3.03 in. o.k.
5) R > dh + 2b	8.00 in. > 3.03 in. + 2(2.23 in.) = 7.50 in. o.k.
6) 2/3w < b < 3/4w	2/3(3.00 in.) < 2.23 in. < 3/4(3.00 in.) 2.00 in. < 2.23 in. < 2.25 in. o.k.

Pu = 1.2(25.0 kips) + 1.6(15.0 kips)= 54 kips

Calculate the available tensile yield strength at the eye bar body (at w)

Ag = 3.00 * (0.625) = 1.88 in^2

ΦPn= 0.9 FyAg = 0.9 (36 ksi)(1.88 in^2) = 60.9 kips > 54 kips O.K.

Ex10 : A 5 x ½ bar of A572 Gr. 50 steel is used as a tension member. It is connected to a gusset plate with six 7/8 in. diameter bolts as shown in below. Assume that the effective net area Ae equals the actual net area An and compute the tensile design strength of the member.

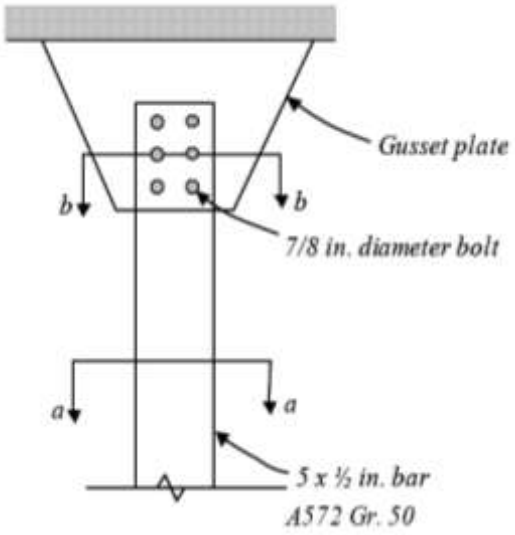

Solution

- Gross section area = A_g = 5 x ½ = 2.5 in^2
- Net section area (A_n)
  - Bolt diameter = d_b = 7/8 in.
  - Hole diameter = d_h = 7/8 + 1/8 in. = 1 in.
  - Net section area = A_n = (5 – 2 x (1)) x ½ = 1.5 in^2
- Gross yielding design strength = $\varphi_t P_n = \varphi_t F_y A_g$
  - Gross yielding design strength = 0.9 x 50 ksi x 2.5 in^2 = 112.5 kips

- Fracture design strength = $\varphi_t P_n = \varphi_t F_u A_e$
  - Assume $A_e = A_n$ (only for this problem)
  - Fracture design strength = 0.75 x 65 ksi x 1.5 in^2 = 73.125 kips
- Design strength of the member in tension = smaller of **73.125** kips and 112.5 kips

Therefore, design strength = **73.125 kips** (net section fracture controls).

EX11: Find the ***design strength*** of the angle shown in figure below A36 steel is used and holes are for 7/8 in diameter bolts?

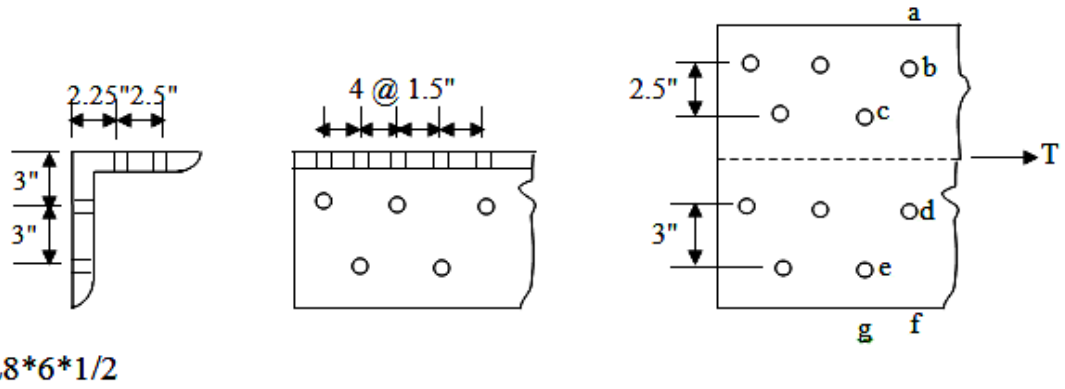

L8*6*1/2

Solution

Compute the net width = 8 + 6 – 0.5 = 13.5 "
D of holes = 1/8 + 7/8 = 1 "

For line abdf : An = 6.75 - 0.5 * 2* *1 = 5.75 in^2

For line abceg : An = 6.75 – 3(1/2) *1 + $[(1/2) * (\frac{(1.5)^2}{4*(2.5)})]$ = 5.365 in^2

Then path abcdeg : An = 6.75 – 4 (1/2) *1 + (1/2) $(\frac{(1.5)^2}{4*(2.5)})$ + (1/2) $(\frac{(1.5)^2}{4*(4.75)})$ + (1/2) $(\frac{(1.5)^2}{4*(3)})$ = 5.015 in^2

$Ae = An = 5.015\ in^2$

The design strength based on yielding $\varphi P_n = \varphi F_y A_g$

$\varphi P_n = o.9*36 * 6.75 = 219$ kips

The design strength based on fracture $\varphi_t P_n = \varphi_t F_u A_e$

$\varphi P_n = 0.75 * 58 * 5.015 = 218$ kips

The design strength is **218 kips**

EX12: For the member shown which is a single angle section connected through one leg using four 1 in. diameter bolts. The center-to-center distance of the bolts is 3 in. The edge distances are 2 in. Steel material is A36. The factored load is 100 kips. Check block shear.

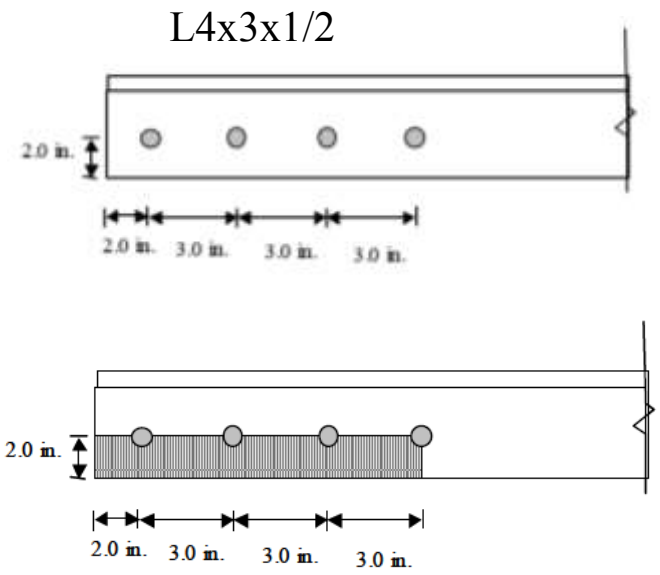

Solution

$A_{gv} = (9+2) \times 0.5 = 5.5\ in^2$

$- A_{nv} = [11 - 3.5 \times (1+1/8)] \times 0.5 = 3.53\ in^2$

- $A_{gt} = 2.0 \times 0.5 = 1.0 \text{ in}^2$
- $A_{nt} = [2.0 - 0.5 \times (1 + 1/8)] \times 0.5 = 0.72 \text{ in}^2$

Identify the governing equation:

- $F_u A_{nt} = 58 \times 0.72 = 41.76$ kips
- $0.6 F_u A_{nv} = 0.6 \times 58 \times 3.53 = 122.844 \text{ in}^2$, which is $> F_u A_{nt}$

Calculate block shear strength
- $\varphi_t R_n = 0.75 (0.6F_u A_{nv} + F_y A_{gt}) = 0.75 (122.84 + 36 \times 1.0) = 119.133$ kips

Which is greater than $P_u = 100$ kips. Therefore L4x3x1/2 is **acceptable**

EX13: Fink trusses spaced at 20 feet on centers support W6 × 12 purlins, as shown in Figure. The purlins are supported at their midpoints by sag rods. Use A36 steel and design the sag rods and the tie rod at the ridge for the following service loads.

Metal deck: 2 psf
Built-up roof: 5 psf
Snow: 18 psf of horizontal projection of the roof surface
Purlin weight: 12 pounds per foot (lb/ft) of length

Solution

Calculate loads:

Tributary width for each sag rod = 20/2 = 10 ft

Tributary area for deck and built-up roof = 10*(46.6) = 466 ft2

Dead load (deck and roof) = (2 + 5)(466) = 3262 lb

Total purlin weight = 12*(10)*(9) = 1080 lb

Total dead load = 3262 + 1080 = 4342 lb

Tributary area for snow load = 10*(45) = 450 ft2

Total snow load = 18*(450) = 8100 lb

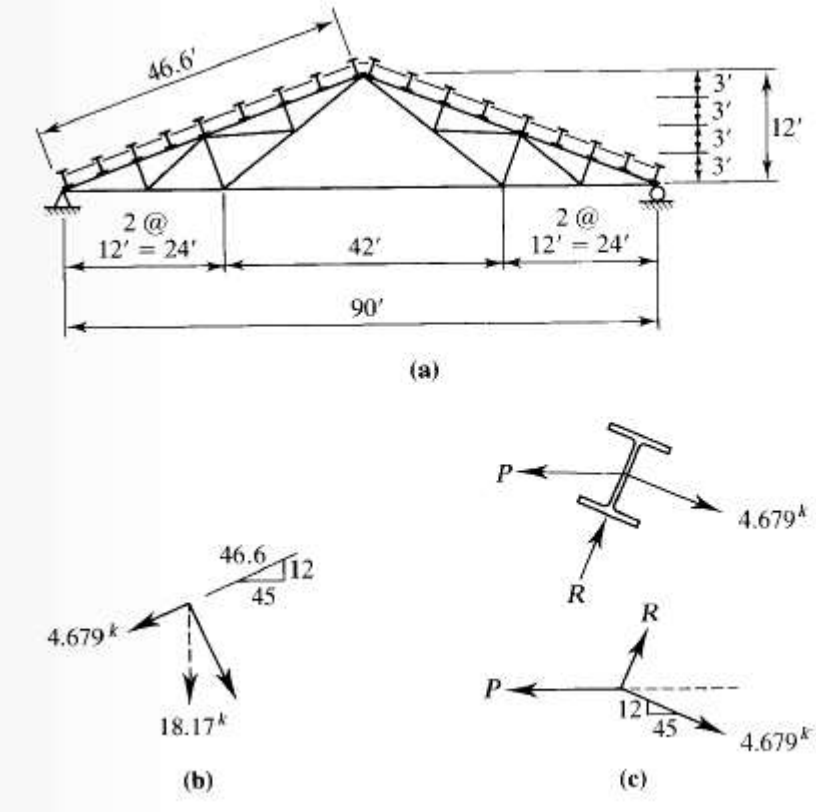

Check load combinations.

Combination 2: 1.2D + 0.5S = 1.2(4342) + 0.5(8100) = 9260 lb

Combination 3: 1.2D + 1.6S = 1.2(4342) + 1.6(8100) = 18,170 lb

Combination 3 controls. (By inspection, the remaining combinations will not govern.)

For the component parallel to the roof,

Use a 5⁄8-inch-diameter threaded rod (Ab = 0.3068 in^2).

Tie rod at the ridge

$$T = (18.17)\frac{12}{46.6} = 4.679 \text{ kips}$$

$$\text{Required } A_b = \frac{T}{\phi_t(0.75F_u)} = \frac{4.679}{0.75(0.75)(58)} = 0.1434 \text{ in.}^2$$

Use a ⅝-inch-diameter threaded rod ($A_b = 0.3068$ in.^{2}).
Tie rod at the ridge (Figure 3.32c):

$$P = (4.679)\frac{46.6}{45} = 4.845 \text{ kips}$$

$$\text{Required } A_b = \frac{4.845}{0.75(0.75)(58)} = 0.1485 \text{ in.}^2$$

Use a 5⁄8-inch-diameter threaded rod (Ab = 0.3068 in^2).

Ex14: A tension member is to consist of a W12 section (Fy = 50 ksi) with fillet welded end connections. The service dead load is 40 k, while it is estimated that the service live load will vary from a compression of 20 kN to a tension of 90 k fifty times per day for an estimated design life of 25 years. Select the section, using the AISC procedures.

Solution:

$$P_u = (1.2)(40 \text{ k}) + (1.6)(90 \text{ k}) = 192 \text{ k}$$

Estimated section size for gross section tension yield

$$A_g \geq \frac{P_u}{\phi_t F_y} = \frac{192 \text{ k}}{(0.9)(50 \text{ ksi})} = 4.27 \text{ in}^2$$

Try W12 × 16($A_g = 4.71$ in^2)

$$n_{SR} = (50)(365)(25) = 456{,}250$$

According to Table A-3.1 in Appendix 3 of the AISC Specification, the member falls into Section 1 of the table and into stress category A.

$$C_f = 250 \times 10^8 \text{ from table}$$

$$F_{TH} = 24 \text{ ksi from table}$$

$$F_{SR} = \left(\frac{C_f}{n_{SR}}\right)^{0.333} = \left(\frac{250 \times 10^8}{456{,}250}\right)^{0.333} = 37.84 \text{ ksi}$$

$$\text{Max service load tension} = \frac{40 \text{ k} + 90 \text{ k}}{4.71 \text{ in}^2} = 27.60 \text{ ksi}$$

$$\text{Min service load tension} = \frac{40 \text{ k} - 20 \text{ k}}{4.71 \text{ in}^2} = 4.25 \text{ ksi}$$

$$\text{Actual stress range} = 27.60 - 4.25 = 23.35 \text{ ksi}$$

$$< F_{SR} = 37.84 \text{ ksi} \qquad \text{(OK)}$$

Use W12 × 16.