Stress Analysis for Plasticity

2.1 The Stress–Strain Behavior

The standard tensile test is unsuitable for obtaining the stress–strain curve of metals up to large values of the strain, since the specimen begins to neck when the rate of hardening decreases to a critical value. At this stage, the increase in load due to strain-hardening is exactly balanced by the decrease in load caused by the diminution of the area of cross section. Consequently, the load attains a maximum at the onset of necking. The longitudinal load at any stage is $P = \sigma A$, where A is the current cross-sectional area and σ the current stress, and the corresponding volume of the specimen is $l\,A$, where l is the current length. Using the constancy of volume, the maximum load condition $dP = 0$ may be written as:

$$\frac{d\sigma}{\sigma} = -\frac{dA}{A} = \frac{dl}{l} = d\varepsilon$$

Thus, the condition for the onset of necking becomes:

$$\frac{d\sigma}{d\varepsilon} = \sigma \ldots\ldots\ldots (1)$$

When the true stress–strain curve is given, the point on the curve that corresponds to the tensile necking can be located graphically from the fact

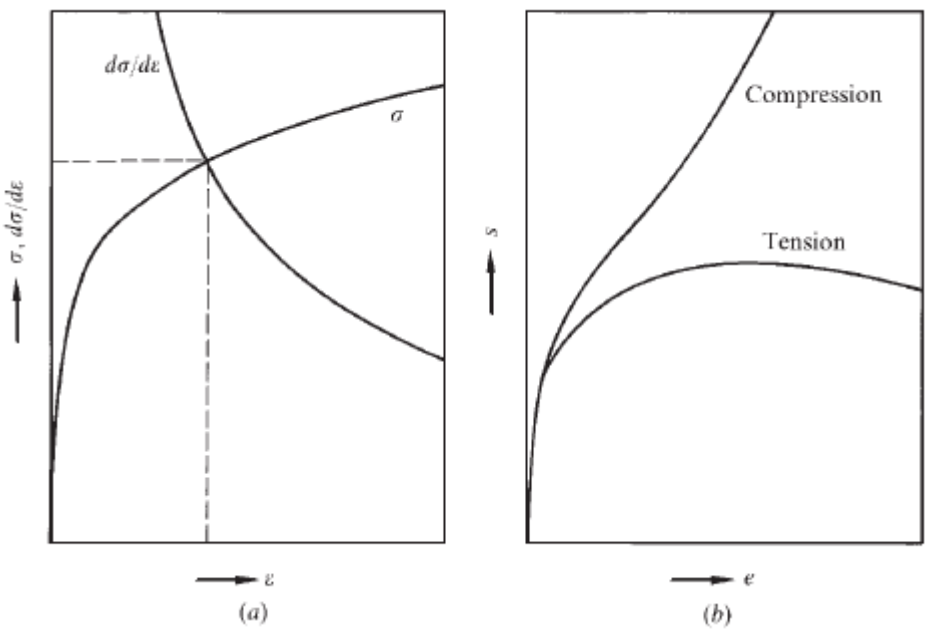

that the slope at this point is equal to the current stress (Figure). A heavily prestrained metal will obviously neck as soon as the yield point is exceeded. Since $d\varepsilon = de/(1+e)$, the condition for necking can be expressed in the alternative form:

$$\frac{d\sigma}{de} = \frac{\sigma}{1+e} \dots\dots\dots (2)$$

It follows that the maximum load corresponds to the point of contact of the tangent to the (σ, e) curve from the point (−1, 0) on the negative strain axis. The tensile test becomes unstable when the load reaches its maximum. The deformation is confined locally in the neck, while the remainder of the specimen recovers elastically under decreasing load until fracture intervenes. The stress distribution in the neck assumes a triaxial state which varies through the cross section of the neck. The test no longer provides a direct measure of the stress–strain behavior.

The strain-hardening characteristic of metals at large strains is most conveniently obtained by compressing a solid cylindrical specimen between a pair of parallel platens. In the absence of efficient lubrication, the compression test is complicated by the fact that the friction at the platens restricts the metal flow at the ends of the specimen, causing barreling as the compression proceeds. Since homogeneous compression is thus prevented by friction, the stress–strain curve cannot be derived by the direct measurement of the load and the change in height of the specimen.

Homogeneous deformation in the simple compression test can be achieved by inserting PTFE (polytetra fluoroethylene) films of suitable thickness between the specimen and the compression platens. As well as producing effective lubrication, the PTFE films are themselves compressed so as to exert radial pressure to the material near the periphery. This inhibits the barreling tendency, except when the film thickness is too small. An excessive film thickness, on the other hand, produces bollarding in which the diameter of the specimen becomes bigger at the ends than at the middle. For a given specimen, there is an optimum film thickness for which neither barreling nor bollarding would occur. The compression should be carried out incrementally,

renewing the PTFE films after each load application. Using the constancy of volume, the load required during the homogeneous compression may be written as:

$$P = \sigma A = \frac{\sigma A_0 h_0}{h} = \frac{\sigma A_0}{1 - e} \dots\dots\dots (3)$$

where A_0 is the original area of cross section of the specimen. The graph for P against e shows an upward inflection and rises continuously without limit (Figure above). Setting $d^2P/de^2 = 0$, and using the fact that $d/d\varepsilon=(1-e)d/de$, the condition for inflection can be found which defines the corresponding point on the true stress–strain curve; this point is most conveniently located if the stress–strain curve is represented by an empirical equation.

The work done in changing the height of a specimen from h to $h+dh$ in simple compression is $-P\,dh$, where P is the current axial load. The incremental work done per unit volume of the specimen is therefore equal to $-P\,dh/Ah$ or $\sigma\,d\varepsilon$. It follows that during the homogeneous compression of a specimen from an initial height h_0 to a current height h, the work done per unit volume is given by the area under the true stress–strain curve up to a total strain of $\ln(h_0/h)$.

2.2 Empirical stress–strain equations

For theoretical computations, it is often necessary to represent an experimentally determined stress–strain curve by an empirical equation of suitable form. When the material is rigid/plastic, it is frequently convenient to employ the Ludwik power law

$$\sigma = C\varepsilon^n \dots\dots\dots (4)$$

where C is a constant stress, and n is a strain-hardening exponent usually lying between zero and 0.5. The equation predicts a zero initial stress and an infinite initial slope, except for $n = 0$ which represents a nonhardening rigid/plastic material. The higher the value of n, the more pronounced is the strain-hardening characteristic of

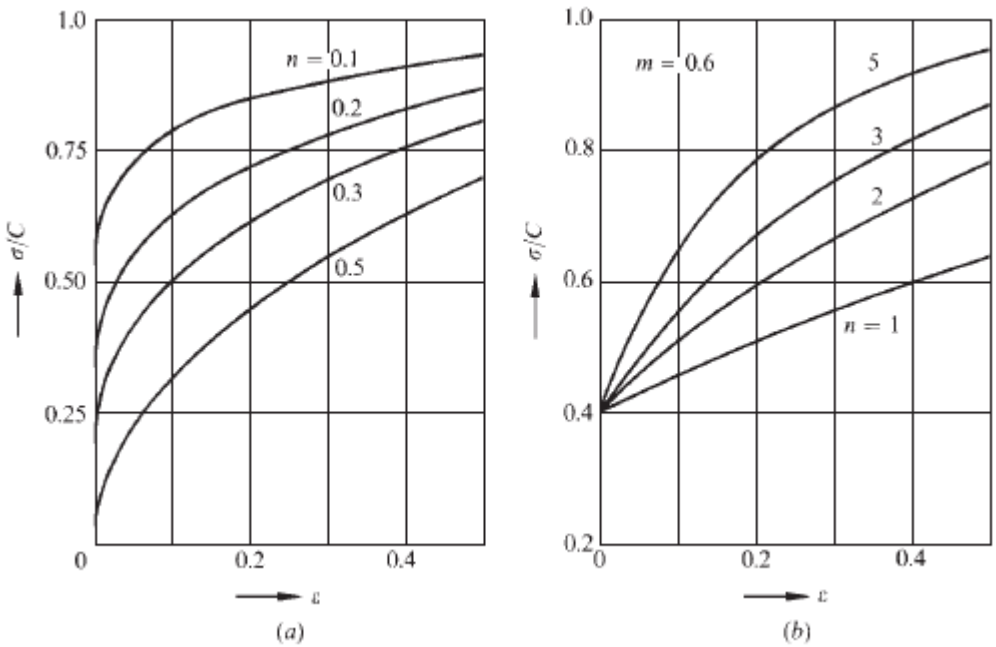

the material (Fig.*a*). Since $d\sigma/d\varepsilon = n\sigma/\varepsilon$ in view of (4), it follows from (1) that the magnitude of the true strain at the onset of necking in simple tension is equal to n. The work done per unit volume during a homogeneous extension or contraction is easily shown to be $\sigma\varepsilon/(1+n)$, where σ and ε are the final values of stress and strain.

For certain applications involving rigid/plastic materials, it is convenient to use an equation suggested by Voce. In its simplest form, the Voce equation may be written as:

$$\sigma = C(1 - me^{-n\varepsilon}) \ldots\ldots\ldots (5)$$

where e is the exponential constant. The curves corresponding to varying m and n approach the asymptote $\sigma = C$ (Fig. *b* above). However, C is unlikely to be the saturation stress of a given metal as the rate of hardening becomes vanishingly small.

The rapidity with which the asymptotic value is approached is represented by n. The coefficient m defines the initial state of hardening, the fully hardened material corresponding to $m = 0$. The slope of the stress–strain curve given by (5) is equal to $n(C - \sigma)$, which varies linearly with the stress.

The simple power law (4) may be readily modified by including a constant term Y representing the initial yield stress. The stress–strain equation then becomes:

$$\sigma = Y(1 + m\varepsilon^n) \dots\dots\dots (6)$$

where *m* and *n* are dimensionless constants. Although this formula represents the strict rigid/plastic behavior of metals, it does not give a better fit for an actual stress– strain curve over a wide range of strains. When *n* = 1, the above equation represents a linear strain-hardening, which is a reasonable approximation for heavily prestrained metals.

A more successful formula, due to Swift, is the generalized power law

$$\sigma = C(m + \varepsilon)^n \dots\dots\dots (7)$$

where *C*, *m*, and *n* are empirical constants. The stress–strain curve represented by (7) can be obtained from that given by (4) if the stress axis is moved along the positive strain axis through a distance *m*. Hence *m* may be regarded as the amount of prestrain in a material whose stress–strain curve in the annealed state corresponds to *m*=0, the value of *n* remaining the same. If a given prestrained metal is represented by both (4) and (7), the value of *n* in the two cases will of course be different. The instability strain in simple tension according to the Swift equation is $n - m$ for $m \leq n$ and zero

for $m \geq n$.

When the elastic and plastic strains are of comparable magnitudes, it is necessary to replace ε in the preceding equations by the plastic strain ε^p. Considering the power law (4), the plastic part of the strain may be assumed to vary as σ^m, where m=1/n,

Since the elastic part of the strain is equal to σ/E, the total strain may be expressed by the Ramberg-Osgood equation:

$$\varepsilon = \frac{\sigma}{E}\left(1 + \alpha\left(\frac{\sigma}{\sigma_0}\right)^{m-1}\right) \dots\dots\dots (8)$$

where σ_0 is a nominal yield stress and α a dimensionless constant. The slope of the stress–strain curve given by the above equation continuously

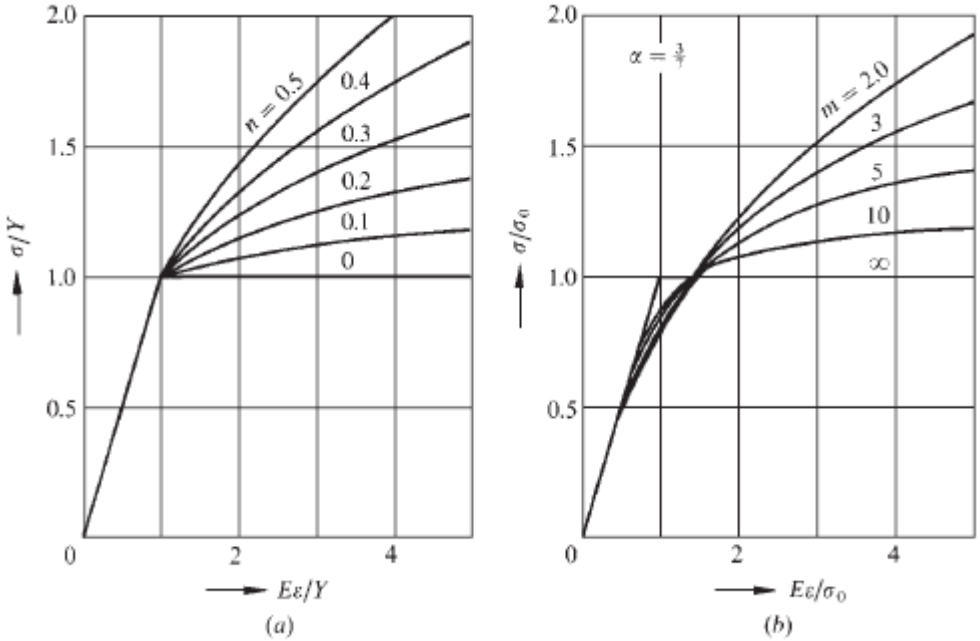

decreases from the value E at the origin (Fig.*b*). At the nominal yield point $\sigma = \sigma_0$, the plastic strain is α times the elastic strain, and the secant modulus is $E/(1+\alpha)$. The tangent modulus at any point of the curve is given by:

$$\frac{E}{K} = 1 + \alpha m \left(\frac{\sigma}{\sigma_0}\right)^{m-1} \quad \dots\dots\dots (9)$$

The second term on the right-hand side is equal to E/H. The stress– strain curve for a range of materials can be reasonably fitted by Equation (8) with $\alpha = 3/7$. For a non- hardening material ($m = \infty$), the equation degenerates into a pair of straight lines meeting at the yield point $\sigma = \sigma_0$.

It is sometimes more convenient to employ a stress–strain equation where the curve in the plastic range is expressed by a simple power law, the material being assumed to have a definite yield point at $\sigma = Y$. The empirical representation then becomes:

$$\sigma = \begin{cases} E\varepsilon & \varepsilon \le \dfrac{Y}{E} \\ Y\left(\dfrac{E\varepsilon}{Y}\right)^n & \varepsilon \ge \dfrac{Y}{E} \end{cases} \quad \dots\dots\dots (10)$$

where *n* is generally less than 0.5. The slope of the stress–strain curve given by (10) changes discontinuously from *E* to *nE* at the yield point (Fig.*a* above). The tangent modulus at any point in the plastic range is *n* times the secant modulus. The empirical curve is effectively the Ludwik curve whose initial part is replaced by a chord of slope *E*.

The Ramberg-Osgood curve represents a continuous transition from the elastic to the plastic behavior expressed by a single equation when the material work-hardens.

A similar curve for the ideally plastic material is given by the equation

$$\sigma = Y tanh\left(\frac{E\varepsilon}{Y}\right)$$

which is due to Prager. The curve having an initial slope *E* gradually bends over to approach the yield stress *Y* in an asymptotic manner. The approach is so rapid that σ is within 1 percent of *Y* when ε is only $4Y/E$. The tangent modulus at any point on the curve is equal to $E(1-\sigma^2/Y^2)$, and the corresponding plastic modulus is $E(Y^2/\sigma^2-1)$. These moduli soon become negligible while the strain is still quite small.

2.3 Deviatoric Stress

The plastic behavior of materials is often independent of a **hydrostatic stress** and this feature necessitates the study of the **deviatoric stress**.

For any given set of cartesian stress components in three dimensions principal stress values can be determined by solving the so-called ***"characteristic equation"***

$$\begin{aligned}{\sigma_p}^3 - (\sigma_{xx} + \sigma_{yy} + \sigma_{zz}){\sigma_p}^2 \\ - \left[\left({\tau_{xy}}^2 + {\tau_{yz}}^2 + {\tau_{zx}}^2\right) - (\sigma_{xx}\sigma_{yy} + \sigma_{yy}\sigma_{zz} + \sigma_{zz}\sigma_{xx})\right]\sigma_p \\ - \left[\sigma_{xx}\sigma_{yy}\sigma_{zz} + 2\tau_{xy}\tau_{yz}\tau_{zx} - \left(\sigma_{xx}{\tau_{yz}}^2 + \sigma_{yy}{\tau_{zx}}^2 + \sigma_{zz}{\tau_{xy}}^2\right)\right] = 0\end{aligned}$$

or in the form: $${\sigma_p}^3 - I_1{\sigma_p}^2 - I_2\sigma_p - I_3 = 0$$

where the **stress invariants**,

$$I_1 = \sigma_{xx} + \sigma_{yy} + \sigma_{zz}$$

$$I_2 = \left(\tau_{xy}{}^2 + \tau_{yz}{}^2 + \tau_{zx}{}^2\right) - \left(\sigma_{xx}\sigma_{yy} + \sigma_{yy}\sigma_{zz} + \sigma_{zz}\sigma_{xx}\right)$$

$$I_3 = \sigma_{xx}\sigma_{yy}\sigma_{zz} + 2\tau_{xy}\tau_{yz}\tau_{zx} - \left(\sigma_{xx}\tau_{yz}{}^2 + \sigma_{yy}\tau_{zx}{}^2 + \sigma_{zz}\tau_{xy}{}^2\right)$$

If the reference axes x, y, z selected are the principal stress axes 1, 2, 3 in the system then:

$$I_1 = \sigma_1 + \sigma_2 + \sigma_3$$

$$I_2 = -(\sigma_1\sigma_2 + \sigma_2\sigma_3 + \sigma_3\sigma_1)$$

$$I_3 = \sigma_1\sigma_2\sigma_3$$

This state of stress can also be decomposed into a **hydrostatic** (or **mean**) **stress** σ_m and a **deviatoric stress** *s*, according to

$$\begin{bmatrix} \sigma_{xx} & \tau_{xy} & \tau_{xz} \\ \tau_{yx} & \sigma_{yy} & \tau_{yz} \\ \tau_{zx} & \tau_{zy} & \sigma_{zz} \end{bmatrix} = \begin{bmatrix} \sigma_m & 0 & 0 \\ 0 & \sigma_m & 0 \\ 0 & 0 & \sigma_m \end{bmatrix} + \begin{bmatrix} s_{xx} & \tau_{xy} & \tau_{xz} \\ \tau_{yx} & s_{yy} & \tau_{yz} \\ \tau_{zx} & \tau_{zy} & s_{zz} \end{bmatrix}$$

where:

the **hydrostatic stress**, $\sigma_m = \frac{\sigma_{xx}+\sigma_{yy}+\sigma_{zz}}{3}$

and the **deviatoric stresses**, $s_{xx} = \frac{1}{3}(2\sigma_{xx} - \sigma_{yy} - \sigma_{zz})$

$$s_{yy} = \frac{1}{3}(2\sigma_{yy} - \sigma_{xx} - \sigma_{zz})$$

$$s_{zz} = \frac{1}{3}(2\sigma_{zz} - \sigma_{yy} - \sigma_{xx})$$

An alternative form of the cubic characteristic equation is obtained by replacing σ_p by $\sigma_p' + \sigma_m$, then we have:

$$\sigma_p'^3 - \left(s_{xx} + s_{yy} + s_{zz}\right)\sigma_p'^2 - \left[\left(\tau_{xy}{}^2 + \tau_{yz}{}^2 + \tau_{zx}{}^2\right) - \left(s_{xx}s_{yy} + s_{yy}s_{zz} + s_{zz}s_{xx}\right)\right]\sigma_p' - \left[s_{xx}s_{yy}s_{zz} + 2\tau_{xy}\tau_{yz}\tau_{zx} - \left(s_{xx}\tau_{yz}{}^2 + s_{yy}\tau_{zx}{}^2 + s_{zz}\tau_{xy}{}^2\right)\right] = 0$$

or in the form: $\sigma_p'^3 - J_1\sigma_p'^2 - J_2\sigma_p' - J_3 = 0$

where the **deviatoric stress invariants**,

$$J_1 = s_{xx} + s_{yy} + s_{zz} = 0$$

$$J_2 = \left({\tau_{xy}}^2 + {\tau_{yz}}^2 + {\tau_{zx}}^2\right) - \left(s_{xx}s_{yy} + s_{yy}s_{zz} + s_{zz}s_{xx}\right)$$

$$J_3 = s_{xx}s_{yy}s_{zz} + 2\tau_{xy}\tau_{yz}\tau_{zx} - \left(s_{xx}{\tau_{yz}}^2 + s_{yy}{\tau_{zx}}^2 + s_{zz}{\tau_{xy}}^2\right)$$

If the reference axes x, y, z selected are the principal stress axes 1', 2', 3' in the system then:

$$J_1 = \sigma_1' + \sigma_2' + \sigma_3' = 0$$

$$J_2 = -(\sigma_1'\sigma_2' + \sigma_2'\sigma_3' + \sigma_3'\sigma_1')$$

$$J_3 = \sigma_1'\sigma_2'\sigma_3'$$

where: $\sigma_1' = \sigma_1 - \sigma_m$, from which: $\sigma_m = \frac{\sigma_1+\sigma_2+\sigma_3}{3}$

$$\sigma_2' = \sigma_2 - \sigma_m$$

$$\sigma_3' = \sigma_3 - \sigma_m$$

2.4 Problems

1. The stress-strain relations for an isotropic metal at room temperature is defined by:

$\sigma = E\varepsilon$, $\varepsilon \leq \varepsilon_Y$ (elastic stress-strain)

$\sigma = (1-\beta)Y + \beta E\varepsilon$, $\varepsilon > \varepsilon_Y$ (inelastic stress-strain)

where E = 210 GPa, Y = 250 MPa , β = 0.08 , and ε_Y = 0.0012 . The intersection of the two lines defines the yield stress Y and yield strain ε_Y = Y/E.

(a) Consider the pin-joined structure in the figure. Each member has a cross-sectional area 645 mm^2 and is made of the above metal.

A load P = 170 kN is applied. Compute the deflection *u.*

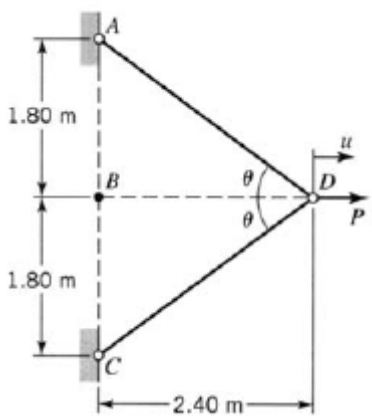

(b) Repeat part (a) for P = 270 kN and

P = 300 kN.

(c) Use the results of parts (a) and (b) to plot a load-deflection graph for the structure.

2. The structure in the figure consists of a rigid beam AB and five rods placed symmetrically about line *CD.* A load *P* is applied to the beam as shown. The members are made of an elastic-perfectly plastic steel *(E* = 200 GPa), and they each have a cross-sectional area of 100 mm^2.

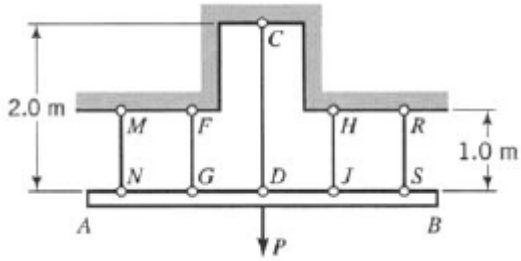

Rods *CD, FG,* and *HJ* have a yield point stress equal to Y_1 = 200 MPa, and rods *MN* and *RS* have a yield point equal to Y_2 = 500 MPa.

(a) Ignoring the weight of the beam, determine the magnitude of load P and the corresponding displacement of beam *AB* for $P = P_Y$, the load for which yield first occurs in the structure.

(b) Repeat part (a) for ***P*** = ***Pp,*** the fully plastic load, that is, the load for which all rods have yielded.

(c) Construct the load-displacement diagram for beam *AB.*

(d) The fully plastic load $\boldsymbol{P_P}$ is gradually removed. Determine the residual forces that remain in the rods of the structure.

3. In a certain annealed material, the yield point is taken as that for which the permanent strain is one-quarter of the recoverable elastic strain. The true stress–strain curve for the material in the plastic range may be represented by the empirical equation

$$\sigma = \frac{E}{180}\varepsilon^{0.25}$$

where *E* isYoung's modulus. Determine the stress *Y* at the yield point as a fraction of *E*, and compute the true and nominal values of the uniaxial instability stress in terms of *Y*.

4. Determine the true stress and the natural strain at the onset of instability in uniaxial tension according to Voce equation for the stress–strain curve.

5. In the simple compression of a short cylinder, the curve representing the variation of the load with the amount of compression shows a point of inflection. If the true stress–strain curve of the material is expressed by the empirical equation $\sigma = C\varepsilon^n$, determine the natural strain corresponding to the point of inflection.

For what range of values of n will this strain exceed the instability strain in simple tension?

6. The effect of elastic deformation of the material on the instability strain may be estimated by considering the stress–strain equation in the Ramberg-Osgood form

$$\varepsilon = \frac{\sigma}{E} + \frac{3\sigma_0}{7E}\left(\frac{\sigma}{\sigma_0}\right)^{1/n}$$

where σ_0 is the nominal yield stress and n is the strain-hardening exponent. Determine the true strain at the onset of necking in simple tension.

7. Two uniform vertical wires shown in the figure, support a load W acting at the free end of an initially horizontal rigid hinged bar. The lower ends of the wires are attached to blocks which can slide along a frictionless groove in the rigid bar. The strain-hardening exponent for the wires is n and $2n$ so that plastic instability is to occur simultaneously in them when the load is increased to a critical value, determine the ratio b/a for such case.

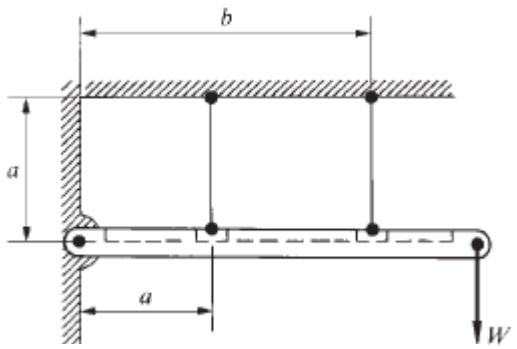

8. The figure illustrates the perforation of a uniform plate of thickness t_0 by a smooth cylindrical drift of radius a having a conical end. Each element of the raised lip may be assumed to form under a uniaxial tensile hoop stress of

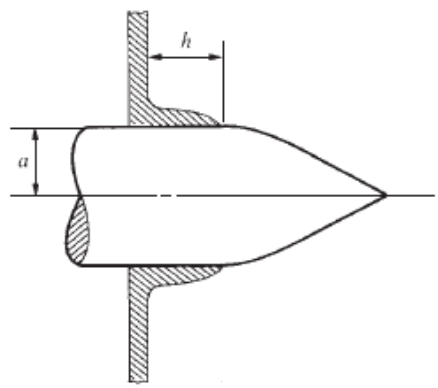

varying intensity. Show that the height of the lip is *h*= 2*a/3*, and that its thickness varies as the cube root of the distance from the outer edge.

9. What are the hydrostatic and deviatoric stresses for the uniaxial stress σxx = σ0

What are the hydrostatic and deviatoric stresses for the state of pure shear τxy= τ ?

In both cases, verify that the first invariant of the deviatoric stress is zero.

10. For the stress state $\begin{bmatrix} \sigma_{xx} & \tau_{xy} & \tau_{xz} \\ \tau_{yx} & \sigma_{yy} & \tau_{yz} \\ \tau_{zx} & \tau_{zy} & \sigma_{zz} \end{bmatrix} = \begin{bmatrix} 1 & 2 & 4 \\ 2 & 2 & 1 \\ 4 & 1 & 3 \end{bmatrix}$, calculate

(a) the hydrostatic stress

(b) the deviatoric stresses

(c) the deviatoric invariants

11. Prove that: $$J_2 = -(\sigma_1'\sigma_2' + \sigma_2'\sigma_3' + \sigma_3'\sigma_1') = \frac{1}{2}(\sigma_1'^2 + \sigma_2'^2 + \sigma_3'^2)$$

12. Prove that:

$$J_2 = -(\sigma_1'\sigma_2' + \sigma_2'\sigma_3' + \sigma_3'\sigma_1') = \frac{1}{6}[(\sigma_1 - \sigma_2)^2 + (\sigma_2 - \sigma_3)^2 + (\sigma_3 - \sigma_1)^2]$$

13. Prove that: $$J_2 = \frac{1}{3}({I_1}^2 - 3I_2)$$

$$J_3 = \frac{1}{27}(2{I_1}^3 - 9I_1I_2 + 27I_3)$$

Chapter Three

The Yield Criteria

3.1 Introduction

Suppose that an element of material is subjected to a system of stresses of gradually
increasing magnitude. The initial deformation of the element is entirely elastic and the original shape of the element is recovered on complete unloading. For certain critical combinations of the applied stresses, plastic deformation first appears in the element. A law defining the limit of elastic behavior under any possible combination of stresses is called *yield criterion*.

In developing a mathematical theory, it is necessary to take into account a number of idealizations at the outset. Firstly, it is assumed that the conditions of loading are such that all strain rate and thermal effects can be neglected. Secondly, the Bauschinger effect and the hysteresis loop, which arise from nonuniformity on the microscope scale, are disregarded. Finally, the material is assumed to be isotropic, so that its properties at each point are the same in all directions.

There is a useful and immediate simplification resulting from the experimental fact that yielding is practically unaffected by a uniform hydrostatic tension or compression.

3.2 Geometrical representation

Consider a system of three mutually perpendicular axes with the principal stresses taken as rectangular coordinates (Figure). The state of stress at any point in a body
may be represented by a vector emanating from the origin *O*. Imagine a line *OH* equally inclined to the three axes, so that its direction cosines are ($1/\sqrt{3}$, $1/\sqrt{3}$, $1/\sqrt{3}$).