University of Anbar

College of Science

Department of Applied Geology

Advanced Structural Geology

Title of the lecture

Faults and Faulting

Assistant Prof. Dr. Abdulkhaleq A. Alhadithi

2022

Faults and Faulting

Introduction

Geologists adopted the term fault, but they use the term in different ways in different contexts. In a general sense, a **fault** is any surface or zone in the Earth across which measurable **slip** (shear displacement) develops. In a more restricted sense, faults are fractures on which slip develops primarily by brittle deformation processes (Figure 1a). This second definition serves to distinguish a fault from a fault zone and shear zone. We use the term **fault zone** for brittle structures in which loss of cohesion and slip occurs on several faults within a band of definable width (Figure 1b). Displacement in fault zones can involve formation and slip on many small, subparallel brittle faults, or slip on a principal fault from which many smaller faults diverge (**fault splays**), or slip on an anastomosing array of faults (Figure 1c and d). **Shear zones** are ductile structures, across which a rock body does not lose mesoscopic cohesion, so that strain is distributed across a band of definable width. In ductile shear zones, rocks deform by **cataclasis**, a process involving fracturing, crushing, and frictional sliding of grains or rock fragments, or, more commonly, by **crystal plastic deformation** mechanisms (Figure 1e).

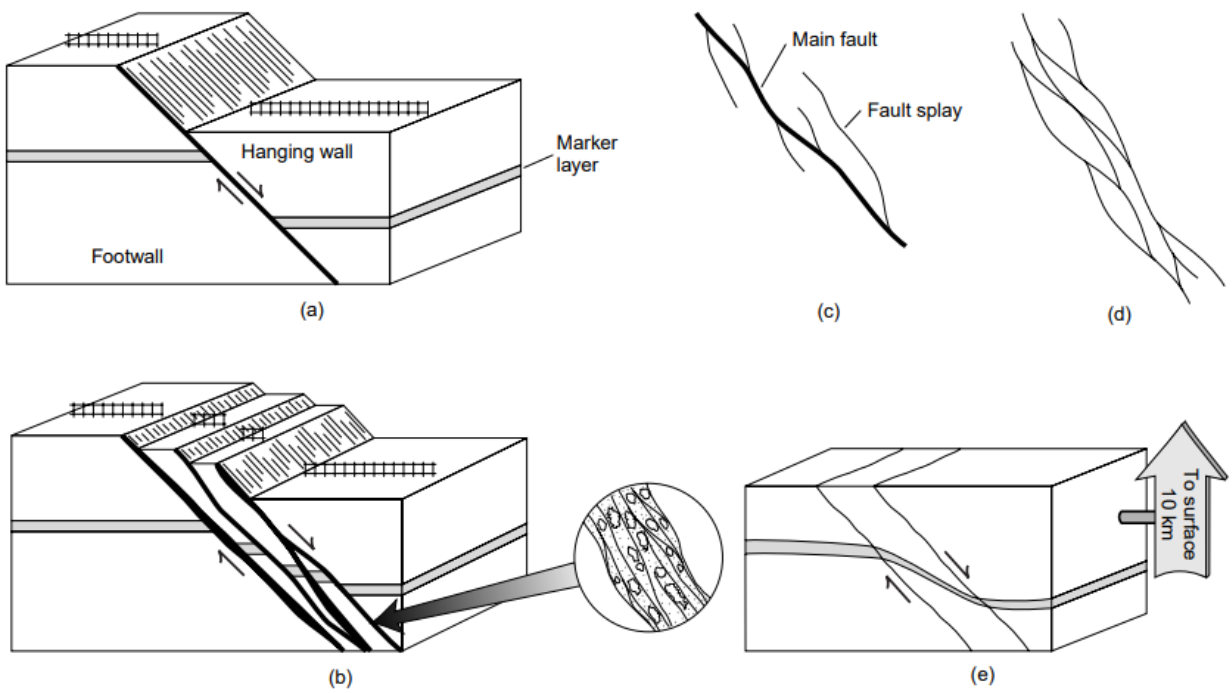

Figure 1 Sketches illustrating differences between faults, fault zones, and shear zones. (a) Fault. (b) Fault zone, with inset showing cataclastic deformation adjacent to the fault surface. (c) Sketch illustrating the relation between a principal fault and fault splays. (d) Anastomosing faults in a fault zone. (e) A shear zone, showing rock continuity across the zone. The displacements are shown to intersect the ground surface, whereas the shear zone occurs at depth in the crust.

Faults occur on all scales in the lithosphere, and geologists study them for several reasons. They control the spatial arrangement of rock units, so their presence creates puzzles that challenge even the most experienced geologic mappers. Faults affect topography and modify the landscape. Faults affect the distribution of economic resources (e.g., oil fields and ore bodies). They control the permeability of rocks and sediments, properties which, in turn, control fluid migration. Faulting creates deformation (strain ± rotation ± translation) in the lithosphere during plate interactions and intraplate movements. And, faulting may cause devastating earthquakes.

Basic Vocabulary

We treat a fault as a geometric surface in a body of rock. Rock adjacent to a fault surface is the **wall** of the fault, and the body of rock that moved as a consequence of slip on the fault is a **fault block**. If the fault is not vertical, you can distinguish between the **hanging-wall block**, which is the rock body above the fault plane, and the **footwall block**, which is the rock body below the fault plane (Figure 1a). This terminology is adopted from mining geology. Note that you cannot distinguish between a hanging wall and a footwall for a vertical fault.

To describe the attitude of a fault precisely, we measure the strike and dip (or dip and dip direction) of the fault. Commonly, geologists use adjectives such as steep, shallow, vertical, and so on, to convey an approximate image of fault dip. Keep in mind that a fault is not necessarily a perfectly planar surface; it may curve and change attitude along strike and/or up and down dip. Where such changes occur, a single strike and dip is not sufficient to describe the attitude of the whole fault, and you should provide separate measurements for distinct segments of the fault. Faults whose dip decreases progressively with depth have been given the special name **listric faults.**

- **Horizontal faults**: Faults with a dip of about 0°; if the fault dip is between about 10° and 0°, it is called subhorizontal.
- **Listric faults:** Faults that have a steep dip close to the Earth's surface and have a shallow dip at depth. Because of the progressive decrease in dip with depth, listric faults have a curved profile that is concave up.
- **Moderately dipping Faults:** with dips between about faults 30° and 60°.
- **Shallowly dipping Faults**: with dips between about faults 10° and 30°; these faults are also called low-angle faults.
- **Steeply dipping faults**: Faults with dips between about 60° and 80°; these faults are also called high-angle faults.
- **Vertical faults**: Faults that have a dip of about 90°; if the fault dip is close to 90° (e.g., is between about 80° and 90°), the fault can be called subvertical.

When fault movement occurs, one fault block slides relative to the other, which is described by the **net slip**. You can completely describe displacement by specifying the **net-slip vector**, which connects two formerly adjacent points that are now on opposite walls of the fault (Figure 2). To describe a net-slip vector, you must specify its magnitude and orientation (plunge and bearing, or rake on a plane), and the **sense of slip** (or shear sense). **Shear sense** defines the relative displacement of one wall of the fault with respect to the other wall; that is, whether one wall went up or down, and/or to the left or right of the other wall.

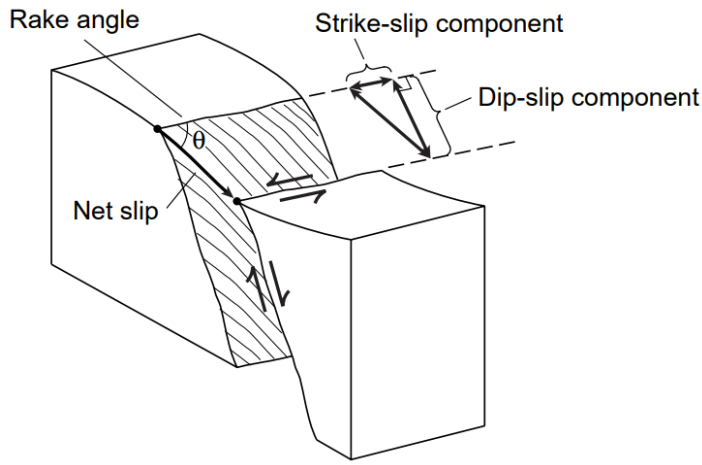

Figure 2 Block diagram sketch showing the net-slip vector with its strike-slip and dip-slip components, as well as the rake and rake angle.

Like any vector, the net-slip vector can be divided into components. Generally, we use the strike and dip of the fault as a reference frame for defining these components. Specifically, you measure the **dip-slip component** of net slip in the direction parallel to the dip direction, and the **strike-slip component** of net slip in the direction parallel to the strike. If the net-slip vector parallels the dip direction of the fault (within ~10°), the fault is called a **dip-slip fault**; if the vector roughly parallels the strike of the fault, the fault is called a **strike-slip fault**. If the vector is not parallel to either dip direction of the strike, we call the fault an **oblique-slip fault**. As you can see in Figure 2, oblique-slip faults have both a strike-slip and a dip-slip component of movement.

We describe the shear sense on a dip-slip fault with reference to a horizontal line on the fault, by saying that the movement is **hanging-wall up** or **hanging-wall down** relative to the footwall. Hanging-wall down faults are called **normal faults**, and hanging-wall up faults are called **reverse faults** (Figure 3a and b). To define sense of slip on a strike-slip fault, imagine that you are standing on one side of the fault and are looking across the fault to the other side. If the opposite wall of the fault moves to your right, the fault is **right-lateral** (or **dextral**), and if the opposite wall of the fault moves to your left, the fault is **left-lateral** (or **sinistral**; Figure 3c and

d). Note that this displacement does not depend on which side of the fault you are standing on. Finally, we define shear sense on an oblique-slip fault by specifying whether the dip-slip component of movement is hanging-wall up or down, and whether the strike-slip component is right-lateral or left-lateral (Figure 3e–h). Commonly, an additional distinction among fault types is made by adding reference to the dip angle of the fault surface; we recognize high-angle (>60° dip), intermediate-angle (30° to 60° dip), and low-angle faults (<30° dip). **Detachment fault** is used for faults that initiate as a horizontal or subhorizontal surface along which the hanging-wall sheet of rock moved relative to the footwall. Some detachments are listric, and on some detachments, regional normal-sense displacement occurs.

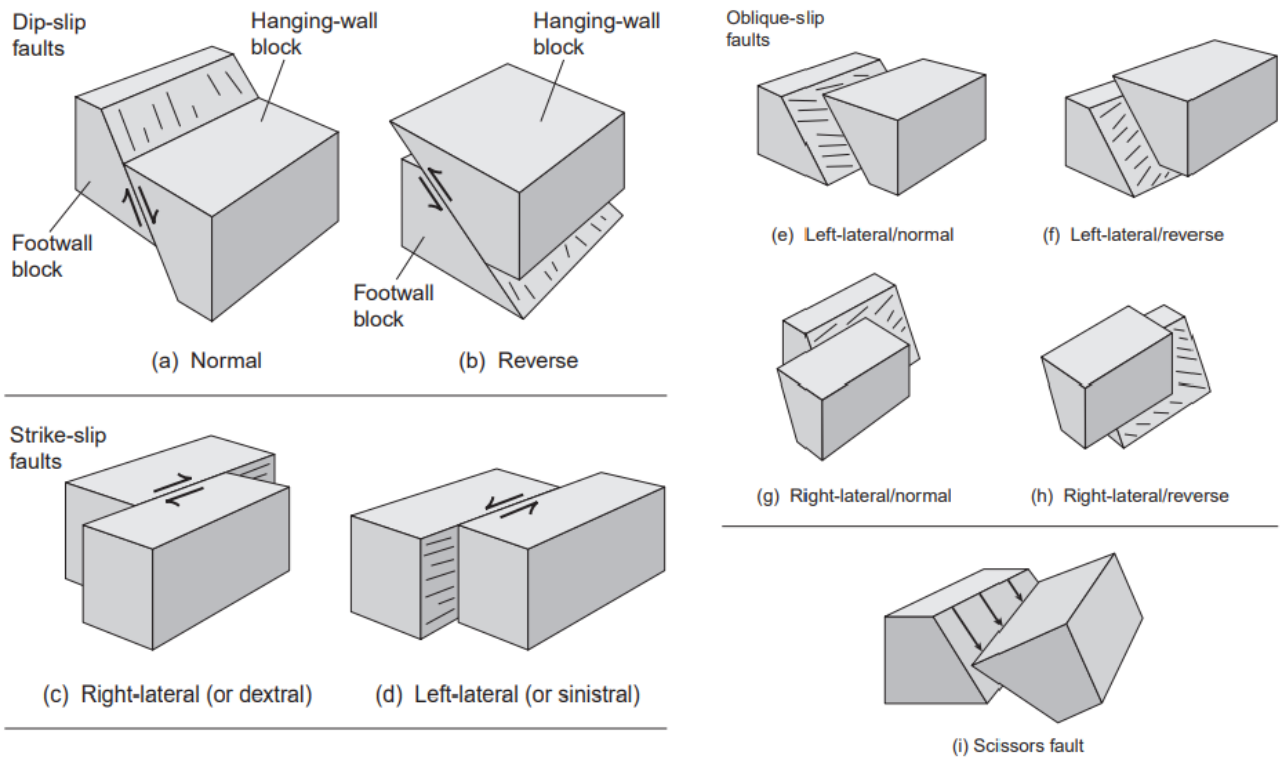

Figure 3 Block diagram sketches showing the different types of faults.

You may be wondering where the terms “normal” and “reverse” come from. Perhaps normal faults were thought to be “normal” because the hanging-wall block appeared to have slipped down the fault plane, just like a person slips down a slide. It is a safe guess that geologists came up with the name “reverse fault” to describe faults that are the opposite of normal.

We also distinguish among faults on the basis of whether they cause shortening or lengthening of the layers that are cut. Imagine that a fault cuts and displaces a horizontal bed marked with points X and Y (Figure 4a). Before movement, X and Y project to points A and B on an imaginary plane above the bedding plane. If the hanging wall moves down, then points X and Y project to

A and B′. The length AB′ is greater than the length AB (Figure 4b). In other words, movement on this fault effectively lengthens the layer. We call a fault which results in lengthening of a layer an **extensional fault**. By contrast, the faulting shown in Figure 4c resulted in a decrease in the distance between points X and Y (AB > AB″). We call a fault which results in shortening of a body of rock a **contractional fault**. Contractional faults result in duplication of section, as measured along a line that crosses the fault and is perpendicular to stratigraphic boundaries, whereas extensional faults result in loss of section. Generally, one can use the term "normal fault" as a synonym for an extensional fault, and the term "reverse fault" as synonym for contractional faults. But such usage is not always correct. Consider a normal fault that rotates during later deformation. In outcrop, this fault may have the orientation and sense of slip you would expect on a reverse fault, but, in fact, its displacement produced extensional strain parallel to layering.

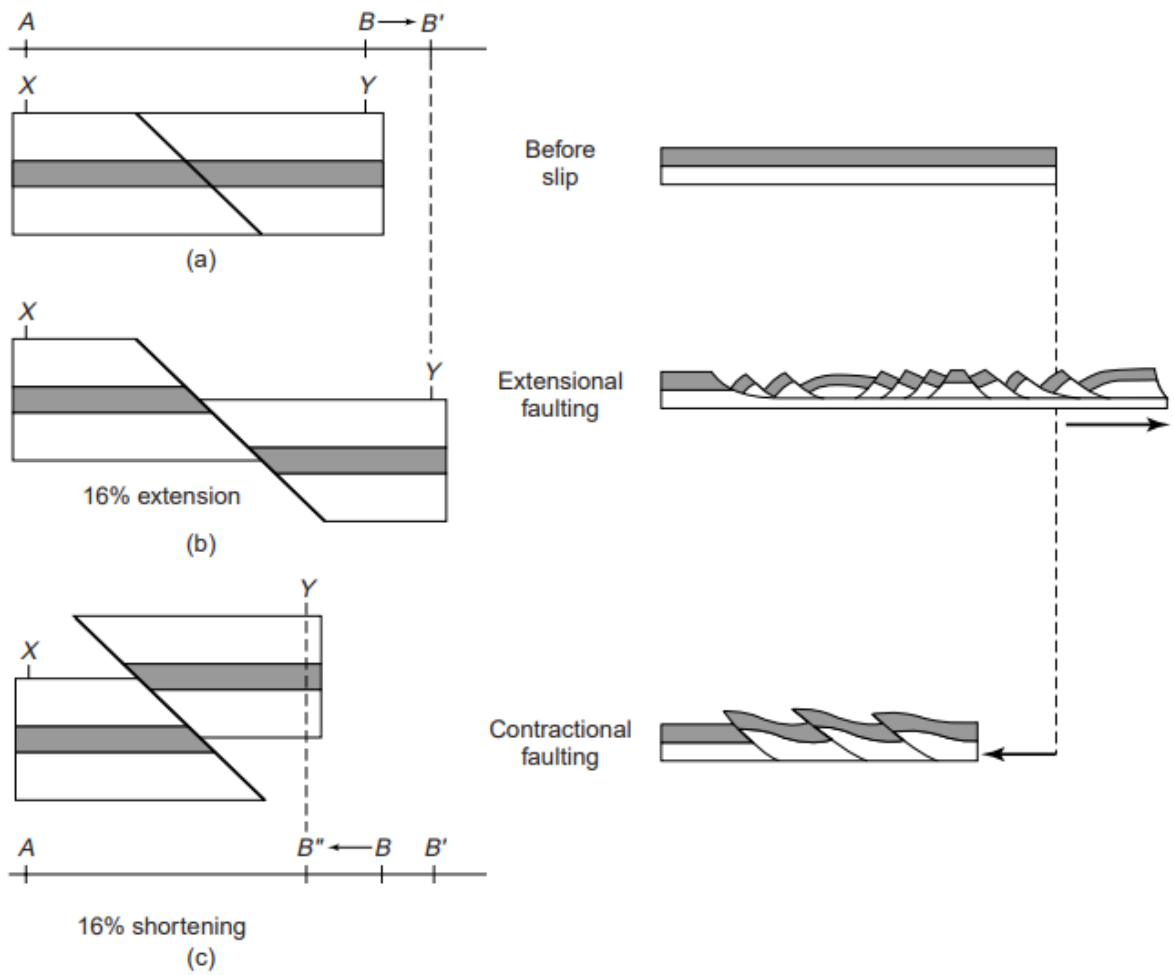

Figure 4 Extensional and contractional faulting. (a) Starting condition, (b) extension, and (c) contraction. Note the respective horizontal length changes.

Representation of Faults on Maps and Cross Sections

Because a fault is a type of geologic contact, meaning that it forms the boundary between two bodies of rock, faults are portrayed as a (heavy) line on geologic maps, like other contacts. We distinguish among different types of faults on maps through the use of symbols (Figure 5). For example, thrust faults are decorated with triangular teeth placed on the hanging-wall side of the trace. (Note that the teeth do not indicate the direction of movement!) Normal faults, regardless of dip, are commonly portrayed by placing barbs on the hanging-wall block. We represent strike-slip faults on a map by placing arrows that indicate the sense of slip on either side of the fault (Figure 5c).

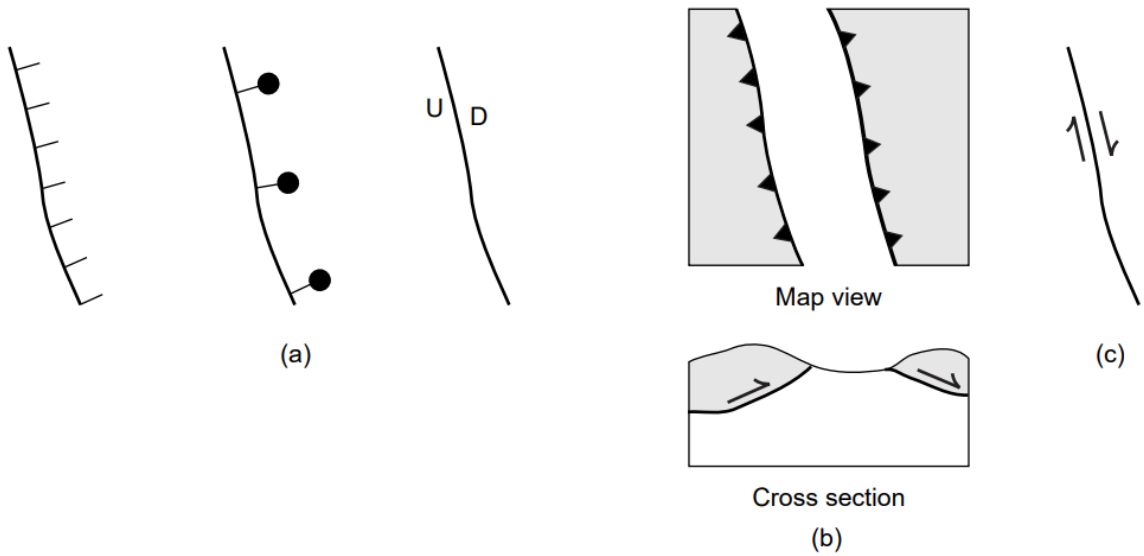

Figure 5 Basic map symbols for (a) normal fault, (b) thrust fault, and (c) strike-slip fault.

In cross sections, faults are also represented by a thick line (Figure 6). If the slip direction on the fault roughly lies in the plane of the cross section, then you indicate the sense of slip on the fault by oppositely facing half-arrows drawn on either side of the fault. If the movement on the fault is into or out of the plane of the section for a strike-slip fault, you indicate the sense of slip by drawing the head of an arrow (a circle with a dot in it) on the block moving toward you, and tail of an arrow (a circle with an X in it) on the block moving into the plane. If the movement is into or out of the page for a dip-slip fault, you place the map symbol (teeth for thrust faults and barbs for normal faults) for the fault on the hanging-wall block. If a fault cuts across the contact between two geologic units, it must displace this contact unless the net-slip vector happens to be exactly parallel to the intersection line between the fault and the contact. The point on a map or cross section where a fault intersects a preexisting contact is called a **cutoff,** and in three dimensions (Figure 6), the intersection between a fault and a preexisting contact is a **cutoff line**.

If the truncated contact lies in the hanging-wall block, the truncation is a **hanging-wall cutoff**, and if the truncated contact lies in the footwall, it is a **footwall cutoff**. When combining map and cross-sectional surfaces with topography, we create a more realistic block diagram, giving us a three-dimensional representation of a region's geology. Consider an area that is characterized by a low-angle reverse faulting (a thrust). Where erosion cuts a hole through a thrust sheet, exposing rocks of the footwall, the hole is a **window** and the teeth are drawn outwards from the hole (Figure 7). An isolated remnant of a thrust sheet surrounded by exposures of the footwall is a **klippe**; this is marked by a thrust-fault symbol with the teeth pointing inwards.

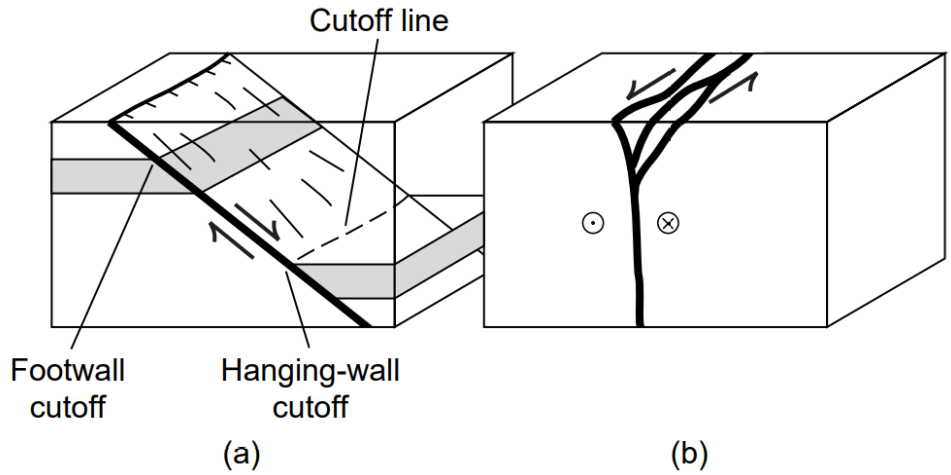

Figure 6 Block diagrams showing the different symbols for representing (a) dip-slip faults and (b) strike-slip faults (here, left-lateral). In (a) we also mark footwall and hanging-wall cutoffs.

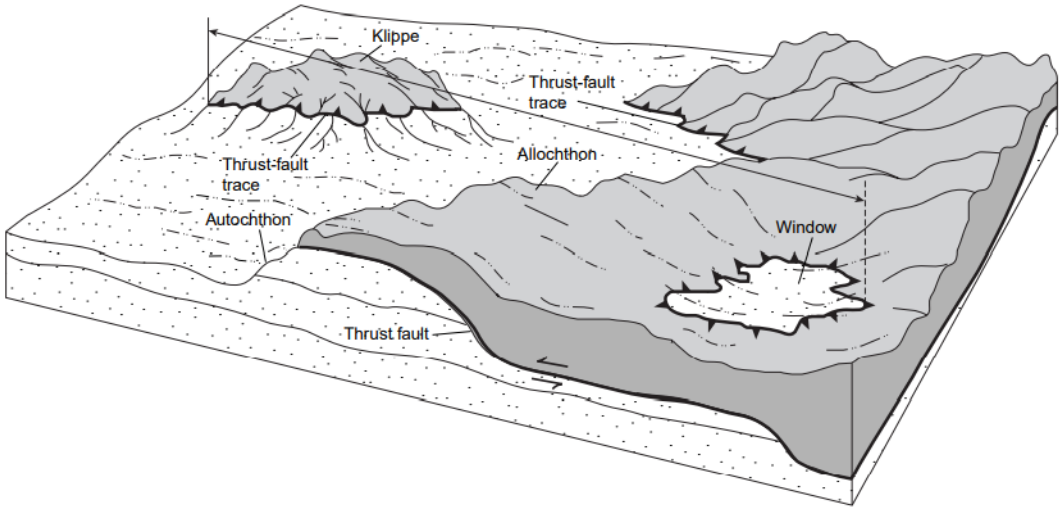

Figure 7 Block diagram illustrating klippe, window (or fenster), allochthon (gray), and autochthon (stippled) in a thrust-faulted region. Note that the minimum fault displacement is defined by the farthest distance between thrust outcrops in klippe and window.

Fault Separation and Determination of Net Slip

Imagine a **marker horizon** (a distinctive surface or layer in a body of rock, such as a bed) that has been cut and offset by slip on a fault (Figure 8a). We define **fault separation** as the distance between the displaced parts of the marker horizon, as measured along a specified line.

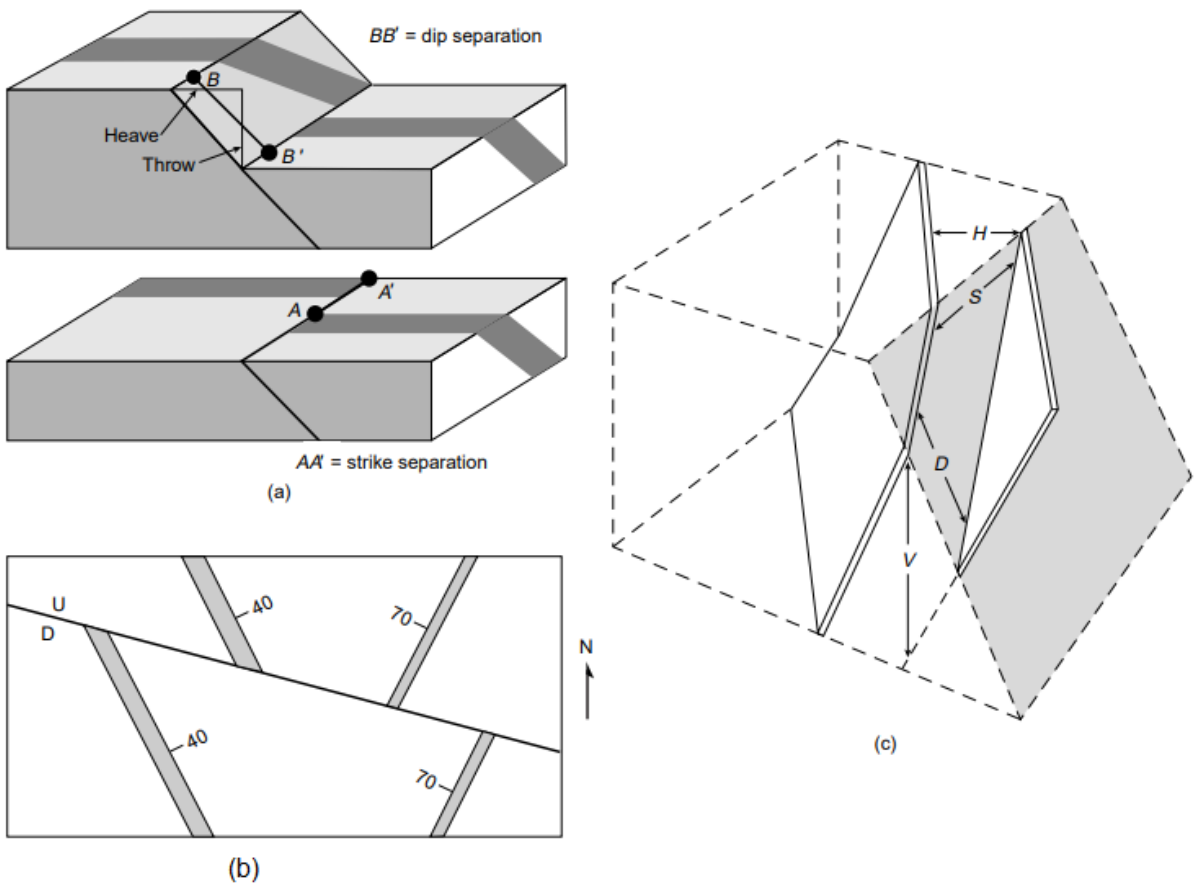

Figure 8 (a) Block diagrams showing dip separation, strike separation, heave, and throw. (b) Map view showing how separation depends on the orientation of the offset layer. The two dikes shown here dip in different directions and have, therefore, different strike separations. (c) Block diagram illustrating horizontal (H) and vertical (V) separation, as well as dip (D) and strike (S) separation.

Separation and net slip are not synonymous, unless the line along which we measure the separation parallels the net-slip vector. The separation for a given fault along a specified line depends on the attitude of the offset marker horizon. Therefore, separation along a specified line is not the same for two nonparallel marker horizons (Figure 8b). Fault separation is a little difficult to visualize, so we will describe different types of fault separation with reference to Figure 8c, which shows an oblique-slip fault that cuts a steeply dipping bed. We define the types of separation illustrated in this figure below.

- **Dip separation** (D) The distance between the two bed/fault intersection points as measured along a line parallel to the dip direction.
- **Heave** The horizontal component of dip separation.
- **Horizontal separation** (H) The offset measured in the horizontal direction along a line perpendicular to the offset surface.
- **Stratigraphic separation** The offset measured in a line perpendicular to bedding.
- **Strike separation (S)** The distance between the two bed/fault intersection points as measured along the strike of the fault.
- **Throw** The vertical component of dip separation.
- **Vertical separation** (V) The distance between two points on the offset bed as measured in the vertical direction. Vertical separation is the separation measured in vertical boreholes that penetrate through a fault.

Note that horizontal beds cut by a strike-slip fault have no strike separation and vertical beds cut by a dip-slip fault have no dip separation. If the fault cuts ground surface, this surface itself is a marker horizon for defining vertical separation, and linear features on the ground (e.g., fences, rows of trees, roads, railroads, river beds) serve as markers for defining horizontal separation. Note those terms also define **heave** and **throw**, which are old terms describing components of dip separation (Figure 8a).

In order to completely define the net-slip vector, you must specify its absolute magnitude, the direction of displacement (as a plunge and bearing) and the sense of slip. If you are lucky enough to recognize two points now on opposite walls of the fault that were adjacent prior to displacement, sometimes referred to as **piercing points**, then you can measure net slip-directly in the field. For example, if you observe a fence on the ground surface that has been offset by a fault, then you can define net slip, because the intersection of the fence with the ground defines a line, and the intersection of this line with the walls of the fault defines two previously adjacent points.

More commonly, however, you won't be lucky enough to observe an offset linear feature, and you must calculate the net-slip vector from other information. This can be done by measurement of (a) separation, along a specified line, of the intersection between a single marker horizon and the fault, plus information on the direction of slip; (b) separation, along two nonparallel lines, of the intersection between a single plane and the fault; or (c) separation, along a specified line, of two nonparallel marker horizons. Look at any standard structural geology methods book for an explanation of how to carry out such calculations. In the relatively rare cases where an earthquake-generating fault cuts ground surface, you can directly measure the increment of displacement accompanying a single earthquake. Generally, however, the displacement that you

measure when studying ancient faults in outcrop is a **cumulative displacement** representing the sum of many incremental offsets that occurred over a long period of time.

If you do not have sufficient information to determine the net slip, you can obtain valuable information about fault displacement by searching for slip lineations and shear-sense indicators. **Slip lineations** are structures on the fault that form parallel to the net-slip vector for at least the last increment of movement on the fault and, possibly, for accumulated movement during progressive deformation. **Shear-sense indicators** are structures on the fault surface or adjacent to the fault surface that define the direction in which one block of the fault moved with respect to the other. Slip lineations alone define the plunge and bearing of the net-slip vector, and with shear-sense indicators they define the direction in which the vector points. Such information can help you interpret the tectonic significance of a fault, even if you don't know the magnitude of displacement across it. The magnitude of the net-slip vector (i.e., fault displacement) on natural faults ranges from millimeters to thousands of kilometers. For example, about 600 km of net slip occurred on the oldest part of the San Andreas fault in California. In discussion, geologists refer to faults with large net slip as major faults and faults with small net slip as minor faults. Keep in mind that such adjectives are relative, and depend on context; a major fault on the scale of an outcrop may be a minor fault on the scale of a continent.

Fault Bends

As we mentioned earlier, fault surfaces are not necessarily planar. It is quite common, in fact, for the attitude of a fault to change down dip or along strike. In some cases, the change is gradual, so that the fault overall has a concave-up shape making these structures **listric faults**. Other faults have wavy traces because their attitude changes back and forth. If the dip and/or strike of a fault abruptly changes, the location of the change is called a **fault bend**. Dip-slip faults that cut across a stratigraphic sequence in which layers have different mechanical properties typically contain numerous stratigraphically controlled bends that make the trace of the fault in cross section resemble a staircase. Some fault segments run parallel to bedding, called **flats**, and some cut across bedding, called **ramps** (Figure 9a).

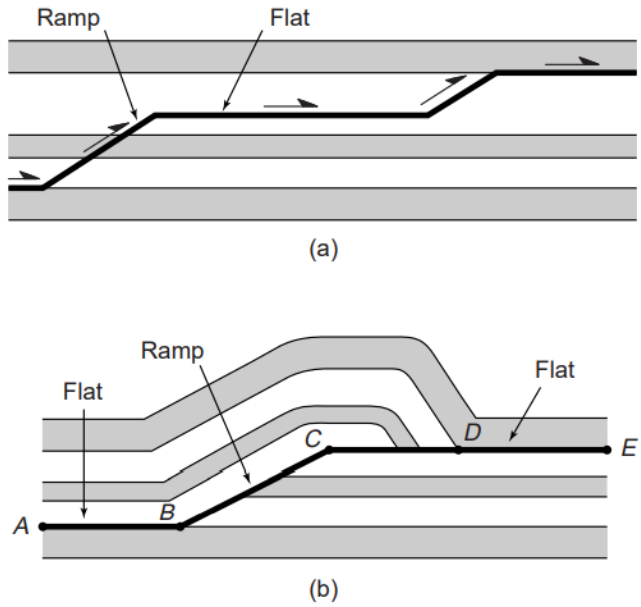

Figure 9 (a) Cross section showing the geometry of ramps and flats along a thrust fault. The fault geometry is shown prior to displacement on the fault. (b) Cross section illustrating hanging-wall and footwall flats and ramps. Segment AB is a hanging-wall flat on a footwall flat. Segment BC is a hanging-wall flat on a footwall ramp. Segment CD is a hangingwall ramp on a footwall flat, and segment DE is a hanging-wall flat on a footwall flat.

If the fault has not been folded subsequent to its formation, flats are (sub)horizontal, whereas ramps have dips of about 30° to 45°. Note that, as shown in Figure 9b, a segment of a fault may parallel bedding in the footwall, but cut across bedding in the hanging wall. Thus, when describing stairstep faults in a stratified sequence you need to specify whether a fault segment is a ramp or flat with respect to the strata of the hanging wall, footwall, or both.

Fault bends (or steps) along strike-slip faults cause changes in the strike of the fault. To describe the orientation of such fault bends, imagine that you are straddling the fault and are looking along its strike; if the bend moves the fault plane to the left, you say the fault steps to the left, and if the bend moves the fault plane to the right, you say that the fault steps to the right. Note that the presence of bends along a strike-slip fault results in either contraction or extension across the step, depending on its geometry. Locations where the bend is oriented such that blocks on opposite sides of the fault are squeezed together are **restraining bends**, whereas locations where the bend is oriented such that blocks on opposite sides of the fault pull away from each other are **releasing bends** (Figure 10). Where movement across a segment of a strike-slip fault results in some compression, we say that transpression is occurring across the fault, and where movement results in some extension, we say that transtension is occurring across the fault. Note that a step to the left on a rightlateral fault yields a restraining bend, whereas a step to the right on a right-lateral fault yields a releasing bend. Try to make up the rules for a left-lateral fault yourself.

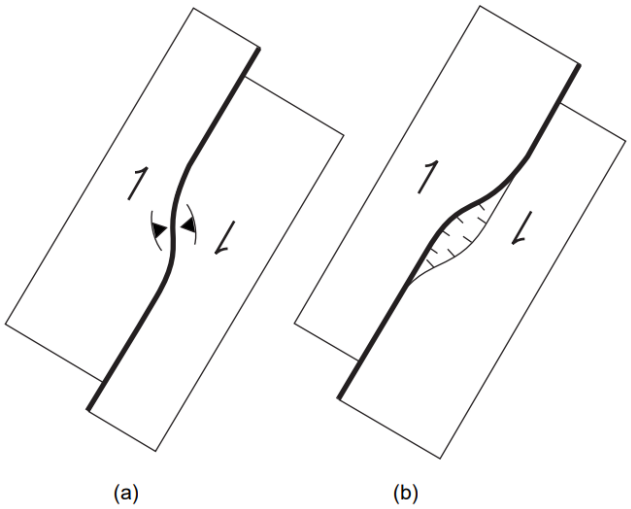

Figure 10Map-view illustrations of (a) a restraining bend and (b) a releasing bend along a right-lateral strikeslip fault.

References

Ben A. van der Pluijm, and Stephen Marshak. (2004) EARTH STRUCTURE AN INTRODUCTION TO STRUCTURAL GEOLOGY AND TECTONICS. Second edition.